US009490940B2

(12) **United States Patent**
Lilleberg et al.

(10) **Patent No.: US 9,490,940 B2**
(45) **Date of Patent: Nov. 8, 2016**

(54) **METHOD AND APPARATUS FOR PROVIDING TRANSMISSION RELAY USING SOFT SYMBOL ESTIMATION**

(75) Inventors: **Jorma Lilleberg**, Oulu (FI); **Ting Zhou**, Shanghai (CN); **Fang Wang**, Jiangsu (CN)

(73) Assignee: **NOKIA TECHNOLOGIES OY**, Espoo (FI)

(*) Notice: Subject to any disclaimer, the term of this patent is extended or adjusted under 35 U.S.C. 154(b) by 1667 days.

(21) Appl. No.: **12/918,996**

(22) PCT Filed: **Feb. 21, 2008**

(86) PCT No.: **PCT/IB2008/000390**

§ 371 (c)(1),
(2), (4) Date: **Nov. 9, 2010**

(87) PCT Pub. No.: **WO2009/104039**

PCT Pub. Date: **Aug. 27, 2009**

(65) **Prior Publication Data**

US 2011/0044379 A1 Feb. 24, 2011

(51) **Int. Cl.**

H04B 3/36	(2006.01)
H04L 1/18	(2006.01)
H04B 7/155	(2006.01)
H04L 1/00	(2006.01)

(52) **U.S. Cl.**

CPC ***H04L 1/1845*** (2013.01); ***H04B 7/15592*** (2013.01); ***H04L 1/0055*** (2013.01); *H04L 1/1812* (2013.01); *H04L 2001/0097* (2013.01)

(58) **Field of Classification Search**

USPC 375/211, 214

See application file for complete search history.

(56) **References Cited**

U.S. PATENT DOCUMENTS

2010/0284448 A1* 11/2010 Miyoshi et al. 375/214

OTHER PUBLICATIONS

International Search Report and Written Opinion of the International Searching Authority from corresponding Patent Cooperation Treaty Application No. PCT/IB2008/000390, dated Apr. 23, 2009, 20 pages.

Invitation to Pay Additional Fees and Where Applicable Protest Fee from corresponding Patent Cooperation Treaty Application No. PCT/IB2008/000390, dated Feb. 4, 2009, 6 pages.

IEEE802.16j, "IEEE Standard for Local and metropolitan area networks Part 16: Air Interface for Broadband Wireless Access Systems Amendment 1: Multihop Relay Specification", Jun. 12, 2009.

Li et al., "Distributed Turbo Coding with Soft Information Relaying in Multihop Relay Networks", IEEE Journal on Selected Areas in Communications, vol. 24, No. 11, pp. 2040-2050.

Bao et al, "Efficient Message Relaying for Wireless User Cooperation: Decode-Amplify-Forward (DAF) and Hybrid DAF and Coded-Cooperation", IEEE Transactions on Wireless Communications, vol. 6, No. 11, Nov. 1, 2007, pp. 3975-3984.

(Continued)

Primary Examiner — Kevin Kim

(74) *Attorney, Agent, or Firm* — Squire Patton Boggs (US) LLP

(57) **ABSTRACT**

An approach is provided for relaying signals. A signal is received over a communication link and demodulated. Soft symbols are estimated based on probability information corresponding to the demodulated signal. The demodulated signal is remodulated based on the soft symbols. A relay signal is output based on the remodulated signal.

18 Claims, 18 Drawing Sheets

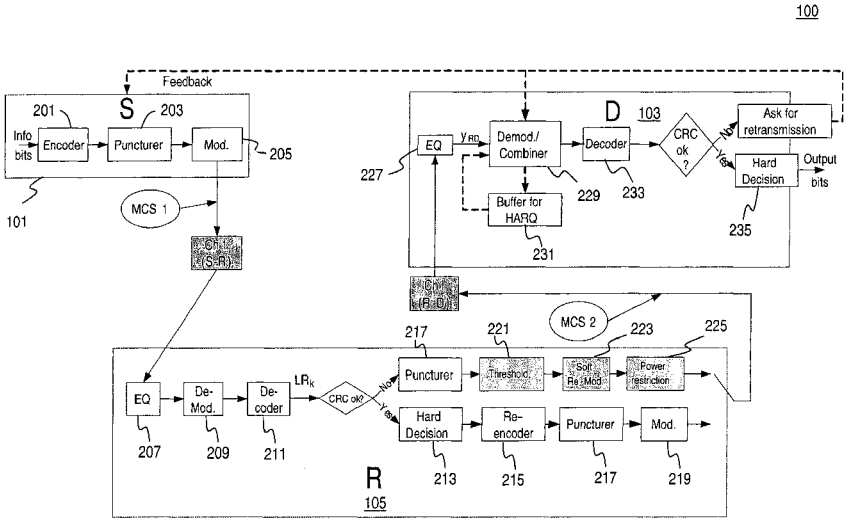

(56) **References Cited**

OTHER PUBLICATIONS

Gomadam et al., "Optimal relay functionality for SNR maximization in memoryless relay networks", IEEE Journal on Selected Areas in Communications, vol. 25, No. 2, Feb. 1, 2007, pp. 390-401.
Schein et al., "The Gaussian parallel relay network," in Proc of ISIT 2000, Jun. 25, 2000, p. 22.
Hasna et al., "End-to-end performance of transmission systems with relays over Rayleigh-fading channels," IEEE Trans Wireless Commun., vol. 2, Nov. 2003, pp. 1126-1131.
Gastpar et al., "On the capacity of wireles networks: The relay case," in Proc of INFOCOM, 2002, pp. 1577-1586.
Sendonaris et al., "User cooperation diversity—Part I: System description," IEEE Trans. Commun., vol. 51, Nov. 2003, pp. 1927-1938.
Sendonaris et al., "User cooperation diversity—Part II: Implementation aspects and performance analysis," IEEE Trans. Commun., vol. 51, Nov. 2003, pp. 1939-1948.
Laneman et al., "Distributed space-time-coded protocols for emploiting cooperative diversity in wireless networks," IEEE Trans. on Inform. Theory, vol. 49, Oct. 2003, pp. 2415-2425.

* cited by examiner

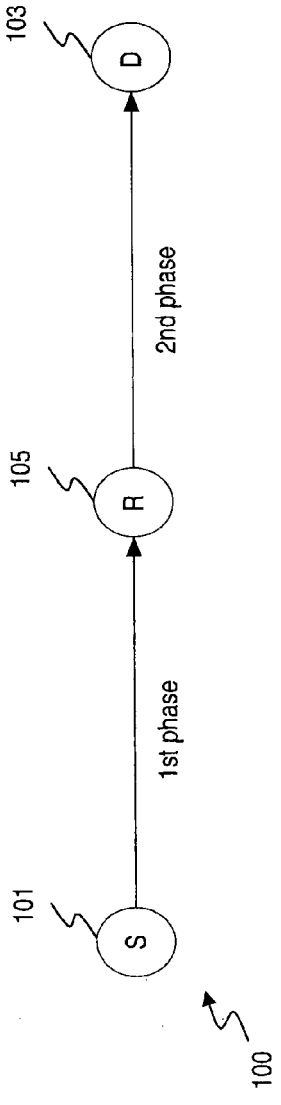
103
D
2nd phase
105
R
1st phase
101
S
100

FIG. 1A

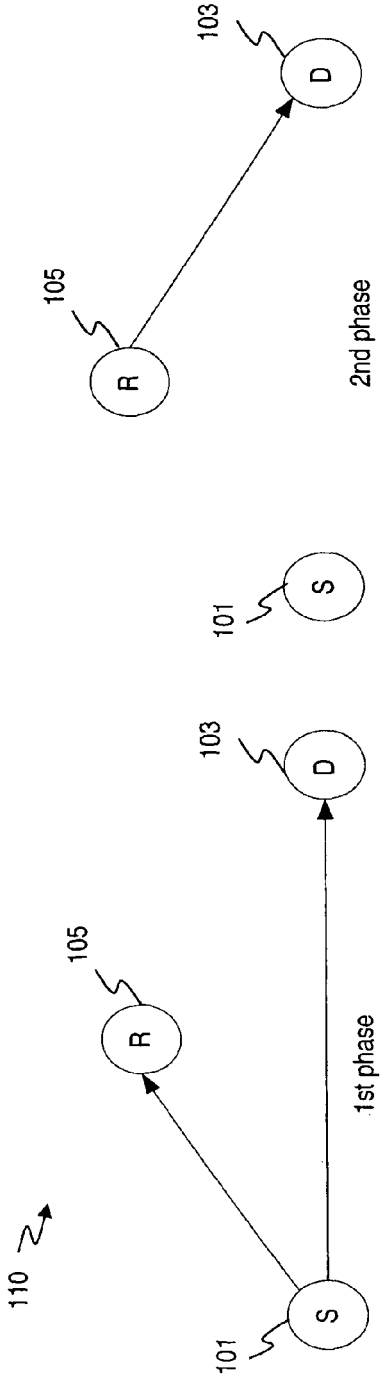
103
D
105
R
2nd phase
101
S
103
D
105
R
1st phase
110
101
S

FIG. 1B

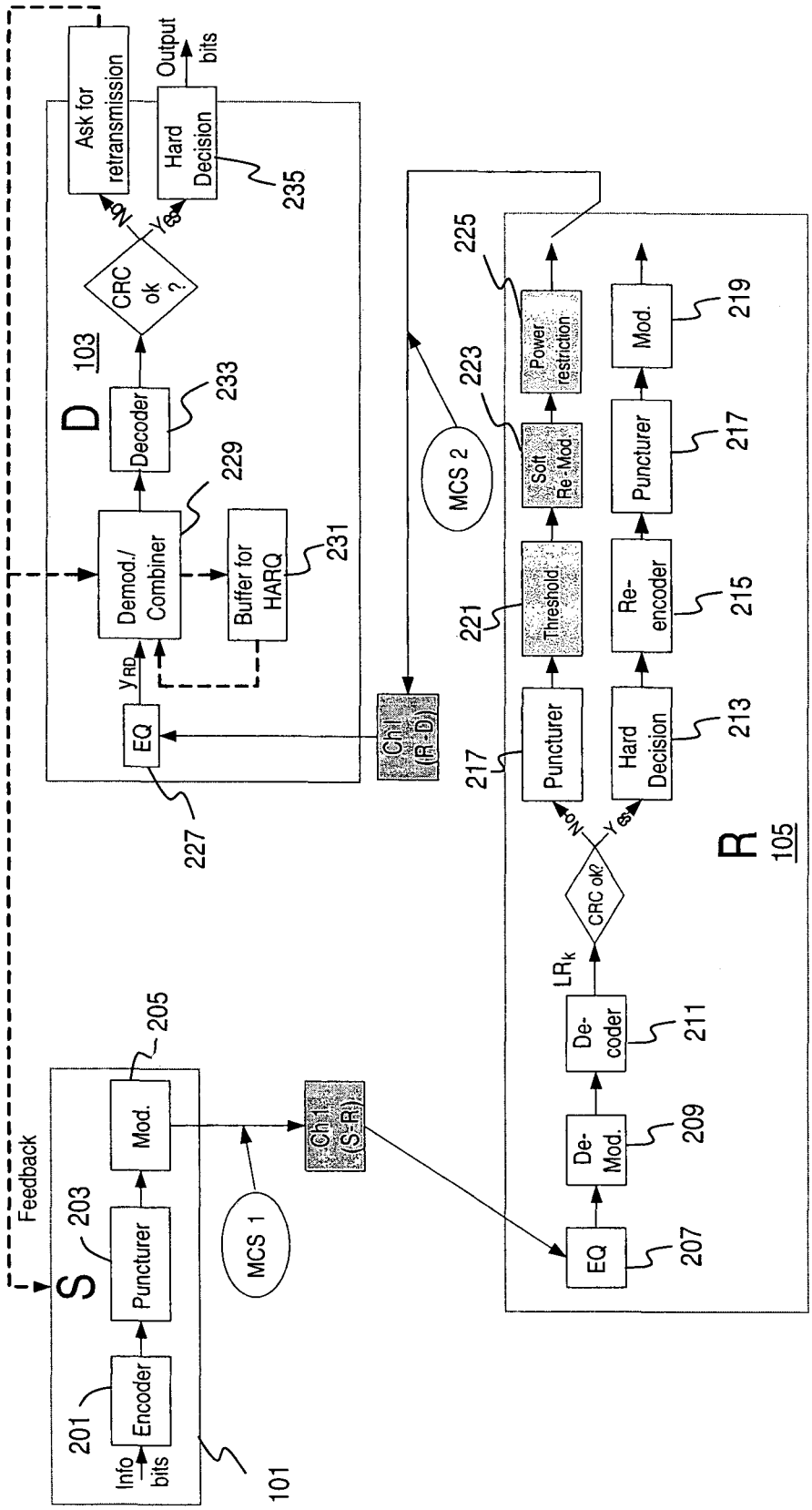
100
Info bits
Encoder
201
Puncturer
203
Mod.
205
S
101
Feedback
MCS 1
Ch.1 (S-R)
EQ
207
De-Mod.
209
De-coder
211
CRC ok?
LRk
No
Yes
Hard Decision
213
Re-encoder
215
Puncturer
217
Threshold
221
Soft Re-Mod.
223
Power restriction
225
Mod.
219
R
105
MCS 2
Ch.1 (R-D)
EQ
227
yRD
Demod./ Combiner
229
Buffer for HARQ
231
Decoder
233
D
103
CRC ok ?
No
Yes
Hard Decision
235
Ask for retransmission
Output bits

FIG. 2A

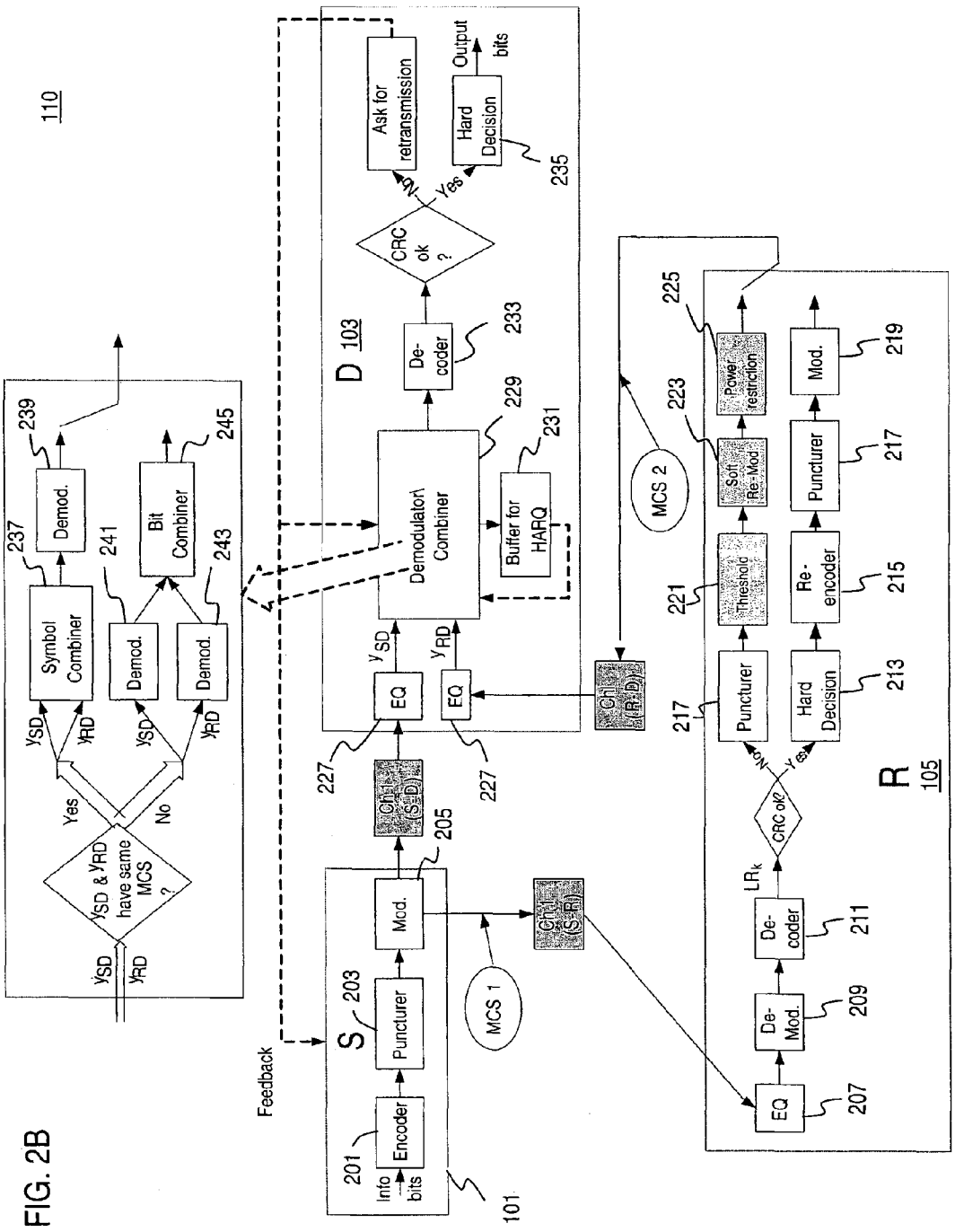
110
y_{SD} & y_{RD} have same MCS ?
Yes
No
y_{SD}
y_{RD}
Symbol Combiner
Demod.
Bit Combiner
237
239
241
243
245
Feedback
S
Info bits
Encoder
Puncturer
Mod.
201
203
205
101
MCS 1
Ch-1 (S-D)
Ch-1 (S-R)
D 103
EQ
Demodulator\ Combiner
Buffer for HARQ
De-coder
CRC ok ?
Ask for retransmission
Hard Decision
Output bits
Yes
No
227
229
231
233
235
Ch-1 (R-D)
MCS 2
R 105
EQ
De-Mod.
De-coder
LR_k
CRC ok?
Puncturer
Hard Decision
Threshold
Re-encoder
Soft Re-Mod
Power restriction
Mod.
207
209
211
213
215
217
219
221
223
225

FIG. 2B

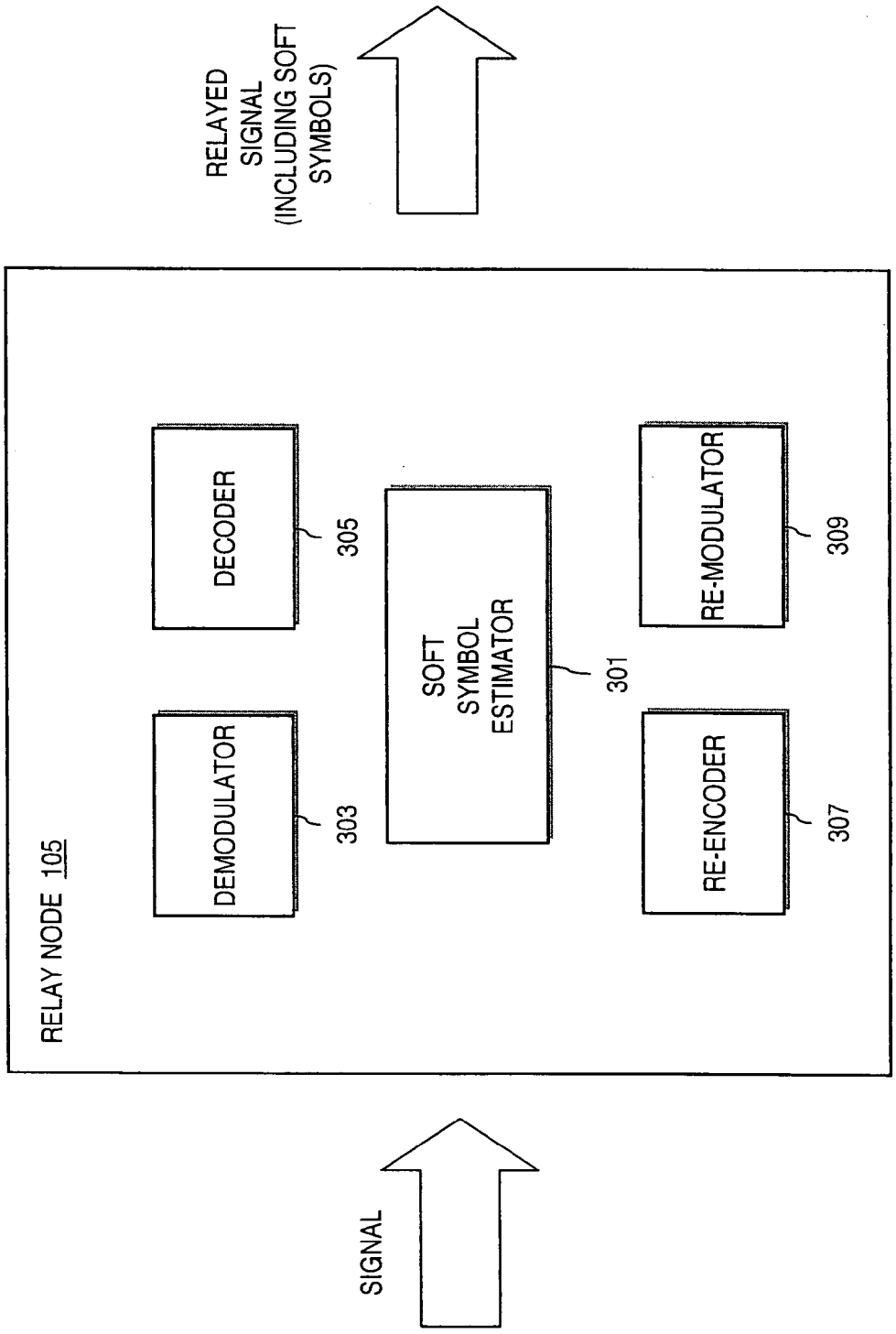
RELAYED SIGNAL (INCLUDING SOFT SYMBOLS)
RELAY NODE 105
DECODER
305
SOFT SYMBOL ESTIMATOR
301
RE-MODULATOR
309
DEMODULATOR
303
RE-ENCODER
307
SIGNAL

FIG. 3

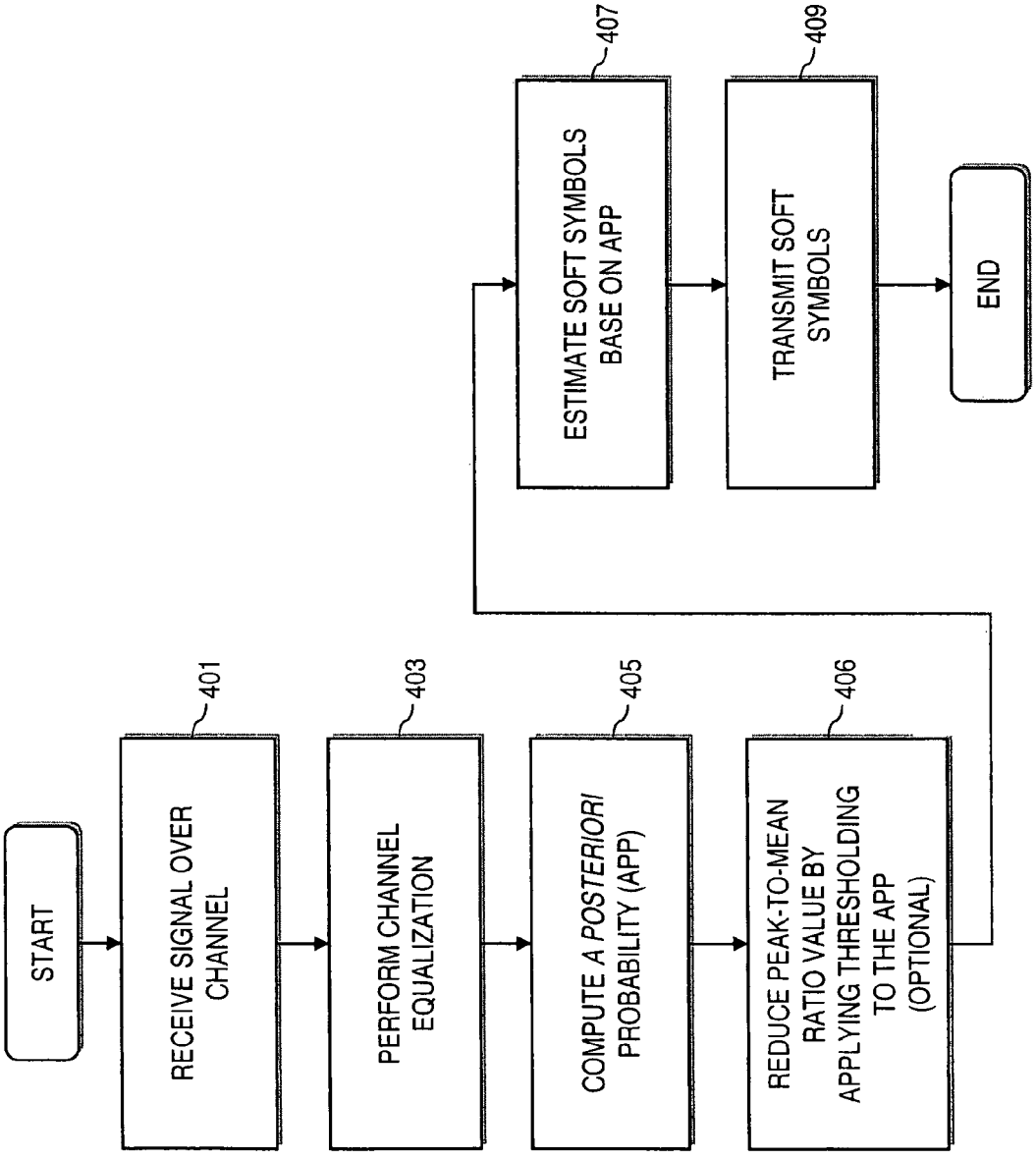
START
RECEIVE SIGNAL OVER CHANNEL
401
PERFORM CHANNEL EQUALIZATION
403
COMPUTE A POSTERIORI PROBABILITY (APP)
405
REDUCE PEAK-TO-MEAN RATIO VALUE BY APPLYING THRESHOLDING TO THE APP (OPTIONAL)
406
ESTIMATE SOFT SYMBOLS BASE ON APP
407
TRANSMIT SOFT SYMBOLS
409
END

FIG. 4

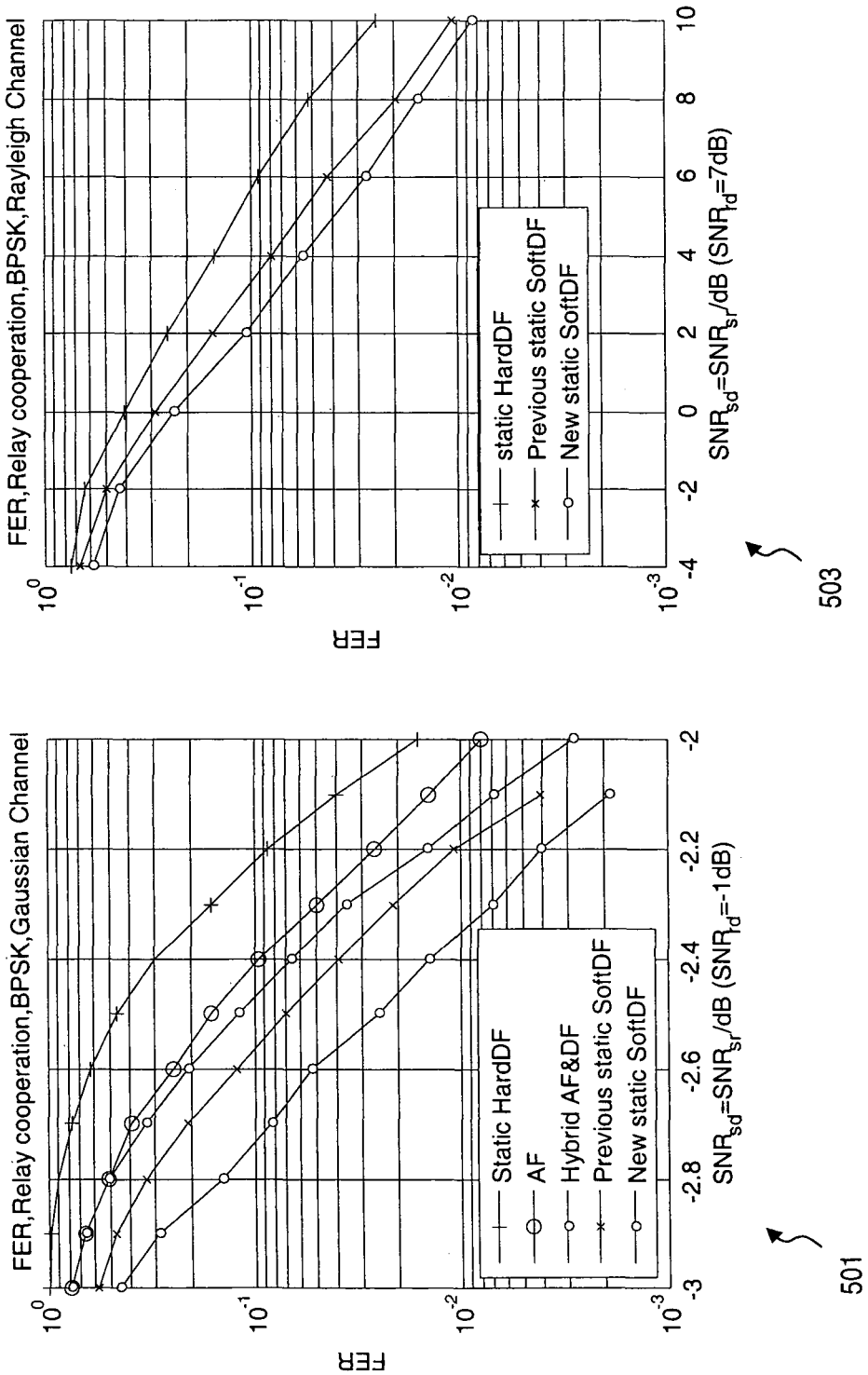
FER,Relay cooperation,BPSK,Rayleigh Channel
FER
$SNR_{sd}=SNR_{sr}$/dB (SNR_{rd}=7dB)
static HardDF
Previous static SoftDF
New static SoftDF
503
FER,Relay cooperation,BPSK,Gaussian Channel
FER
$SNR_{sd}=SNR_{sr}$/dB (SNR_{rd}=-1dB)
Static HardDF
AF
Hybrid AF&DF
Previous static SoftDF
New static SoftDF
501

FIG. 5

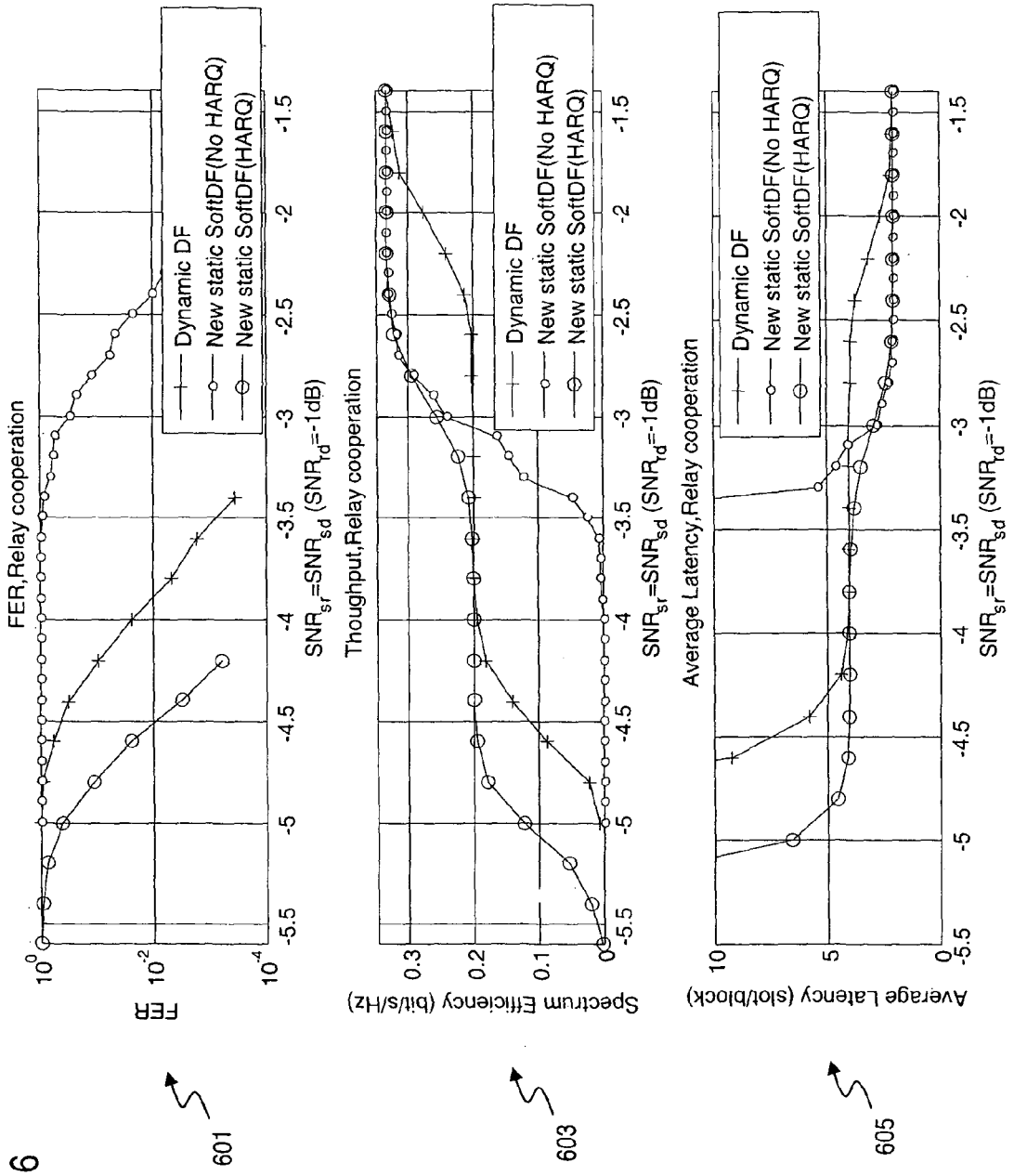
FER,Relay cooperation
FER
10^0
10^{-2}
10^{-4}
-1.5
-2
-2.5
-3
-3.5
-4
-4.5
-5
-5.5
$SNR_{sr}=SNR_{sd}$ (SNR_{rd}=-1dB)
Dynamic DF
New static SoftDF(No HARQ)
New static SoftDF(HARQ)
601
Thoughput,Relay cooperation
Spectrum Efficiency (bit/s/Hz)
0.3
0.2
0.1
0
603
Average Latency,Relay cooperation
Average Latency (slot/block)
10
5
0
605

FIG. 6

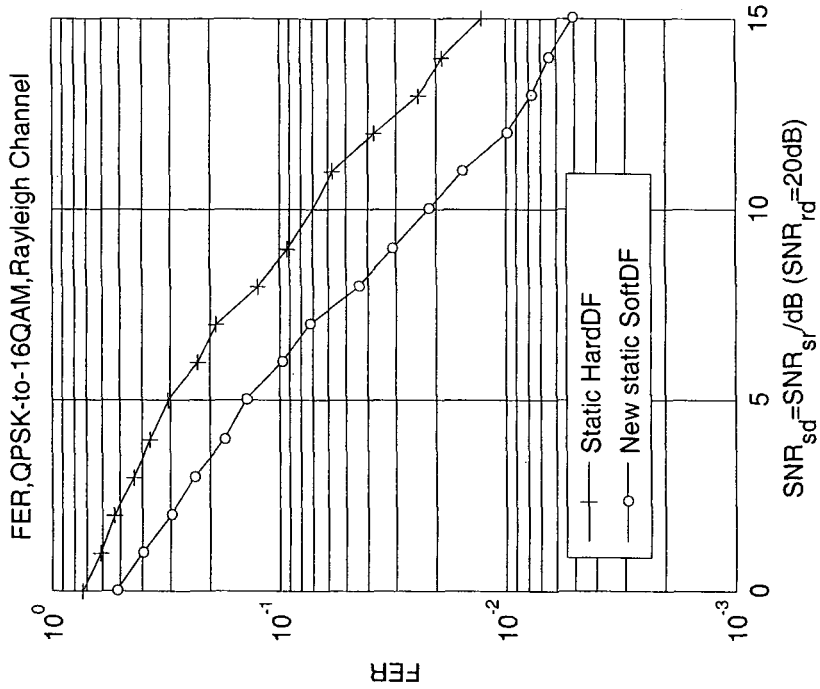
FER,QPSK-to-16QAM,Rayleigh Channel
FER
10^0
10^{-1}
10^{-2}
10^{-3}
0
5
10
15
$SNR_{sd}=SNR_{sr}$/dB (SNR_{rd}=20dB)
Static HardDF
New static SoftDF
703

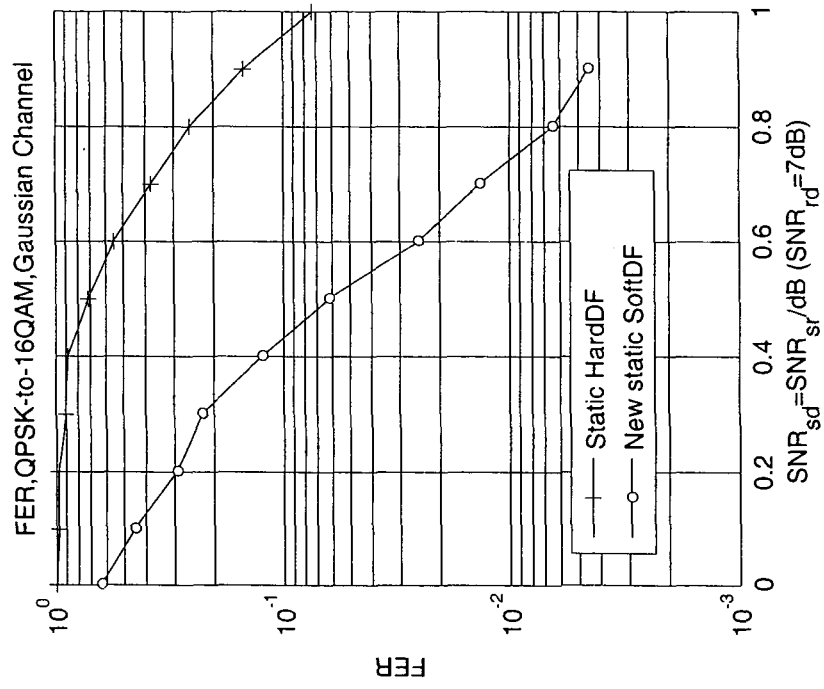
FER,QPSK-to-16QAM,Gaussian Channel
FER
10^0
10^{-1}
10^{-2}
10^{-3}
0
0.2
0.4
0.6
0.8
1
$SNR_{sd}=SNR_{sr}$/dB (SNR_{rd}=7dB)
Static HardDF
New static SoftDF
701

FIG. 7

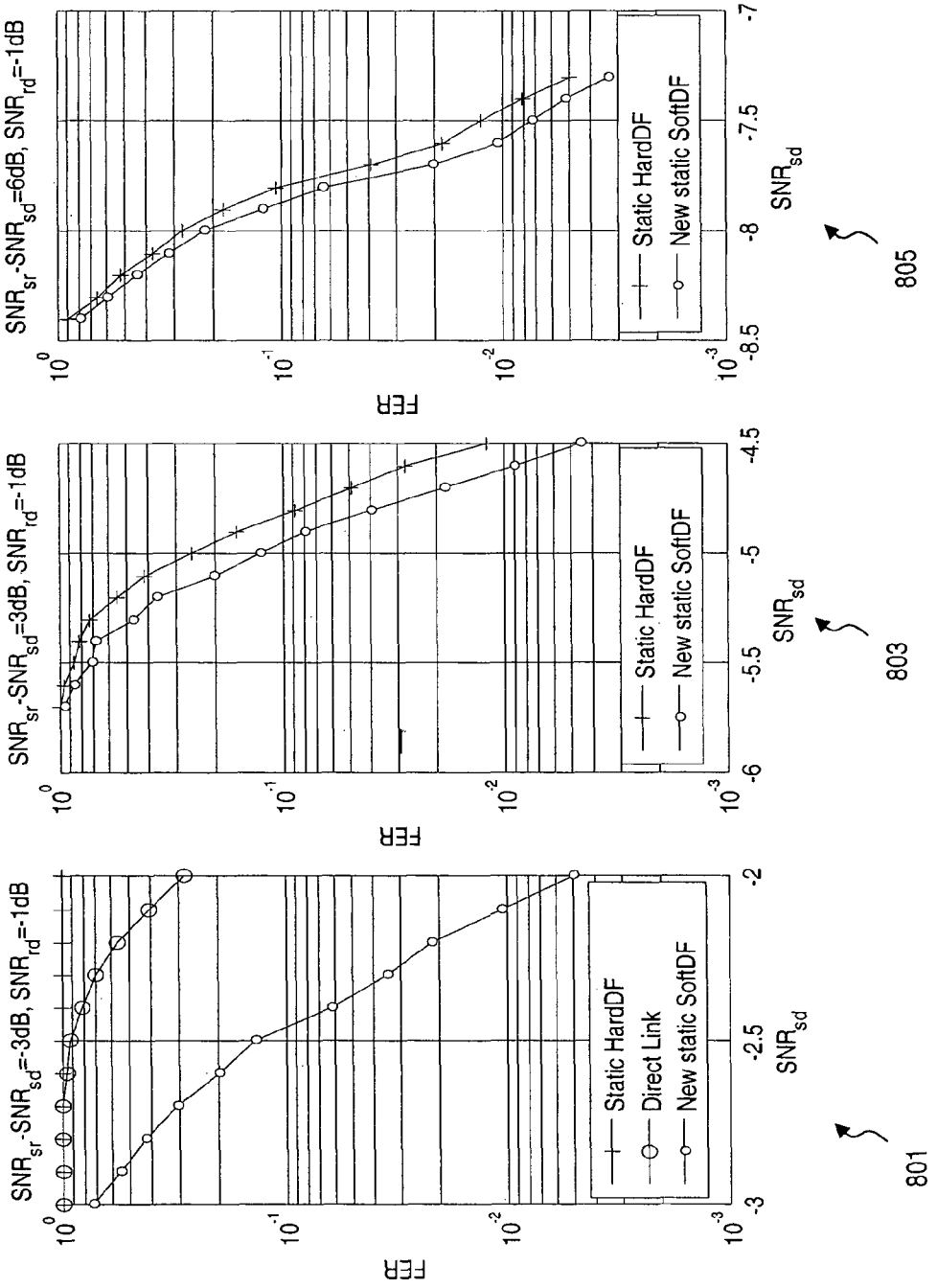
SNR_sr-SNR_sd=-3dB, SNR_rd=-1dB
FER
SNR_sd
Static HardDF
Direct Link
New static SoftDF
801
SNR_sr-SNR_sd=-3dB, SNR_rd=-1dB
FER
SNR_sd
Static HardDF
New static SoftDF
803
SNR_sr-SNR_sd=6dB, SNR_rd=-1dB
FER
SNR_sd
Static HardDF
New static SoftDF
805

FIG. 8

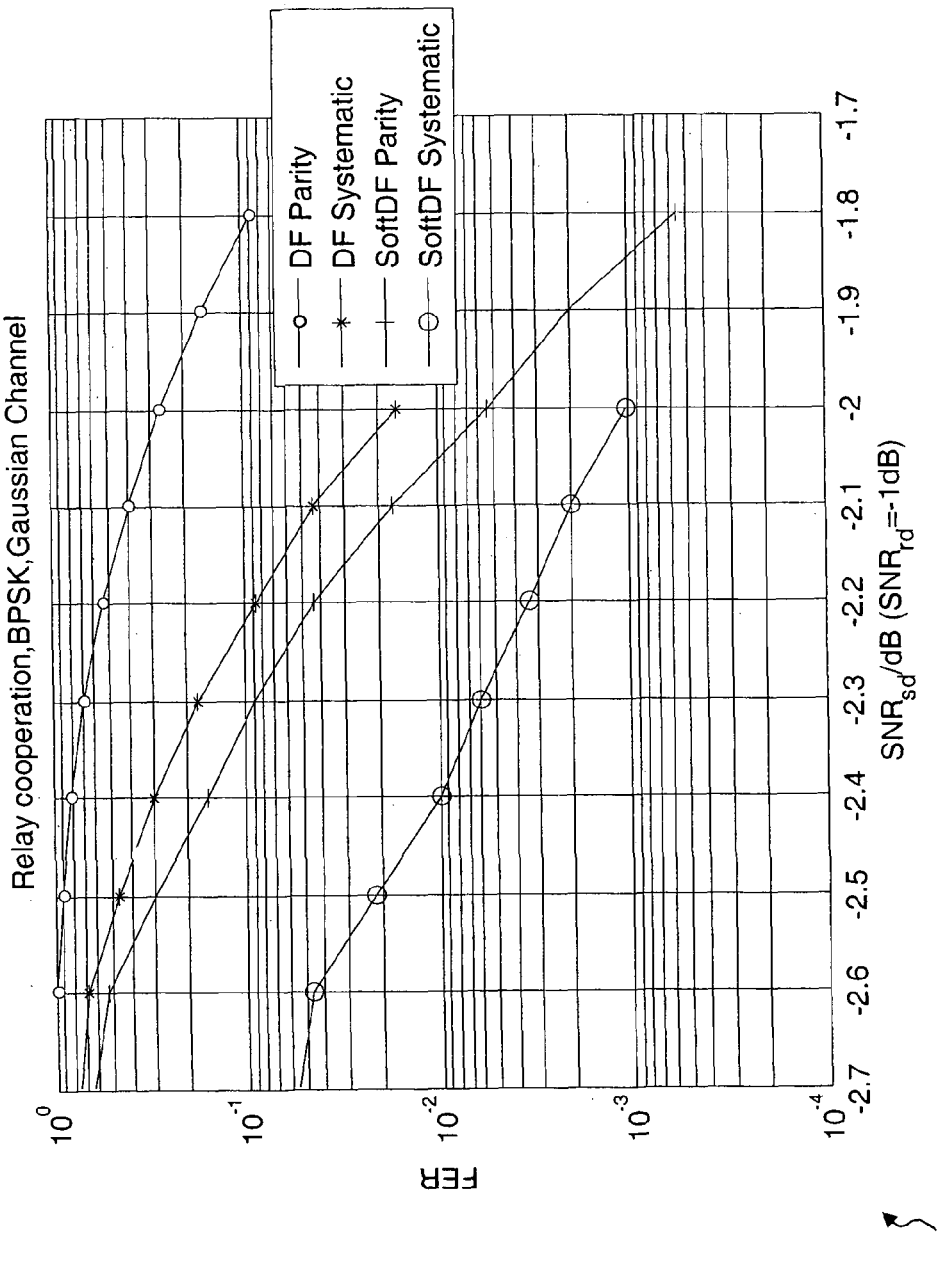
Relay cooperation,BPSK,Gaussian Channel
DF Parity
DF Systematic
SoftDF Parity
SoftDF Systematic
FER
10^{0}
10^{-1}
10^{-2}
10^{-3}
10^{-4}
-2.7
-2.6
-2.5
-2.4
-2.3
-2.2
-2.1
-2
-1.9
-1.8
-1.7
SNR_{sd}/dB (SNR_{rd}=-1dB)
901

FIG. 9

FIG. 10

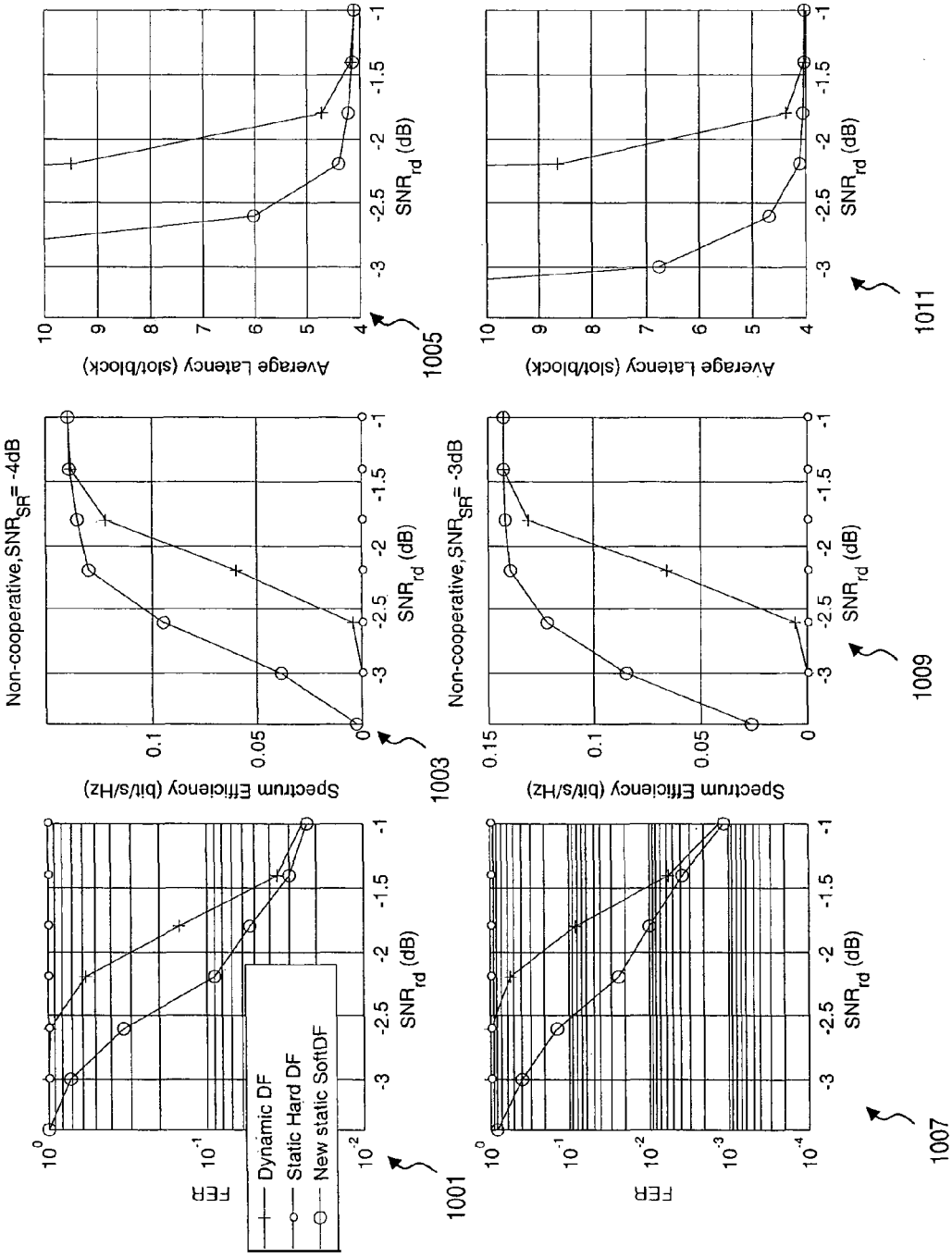
Dynamic DF
Static Hard DF
New static SoftDF
FER
SNR_rd (dB)
Spectrum Efficiency (bit/s/Hz)
Average Latency (slot/block)
Non-cooperative, SNR_SR = -4dB
Non-cooperative, SNR_SR = -3dB
1001
1003
1005
1007
1009
1011

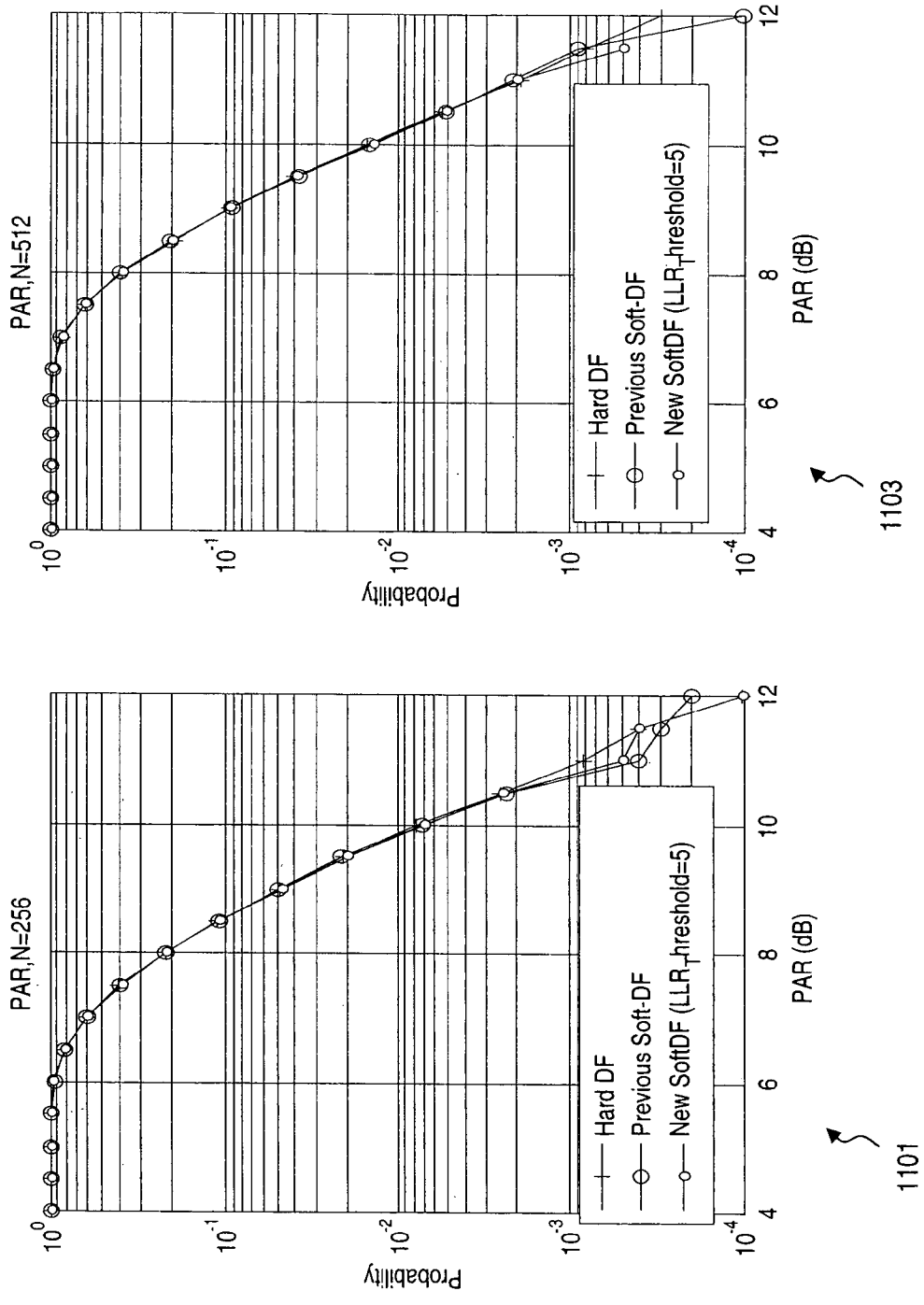
PAR,N=512
Probability
PAR (dB)
Hard DF
Previous Soft-DF
New SoftDF (LLR_Threshold=5)
1103
PAR,N=256
Probability
PAR (dB)
Hard DF
Previous Soft-DF
New SoftDF (LLR_Threshold=5)
1101

FIG. 11

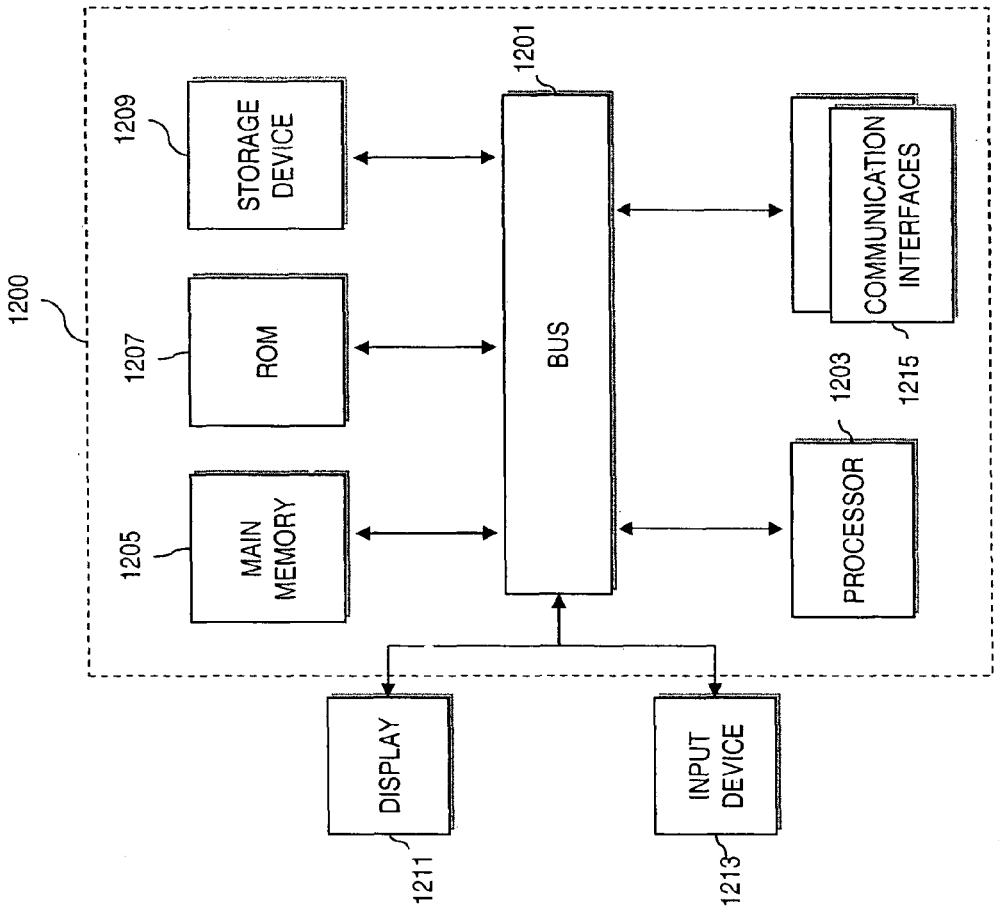
1200
1201
1209
STORAGE DEVICE
1207
ROM
1205
MAIN MEMORY
BUS
COMMUNICATION INTERFACES
1215
1203
PROCESSOR
DISPLAY
1211
INPUT DEVICE
1213

FIG. 12

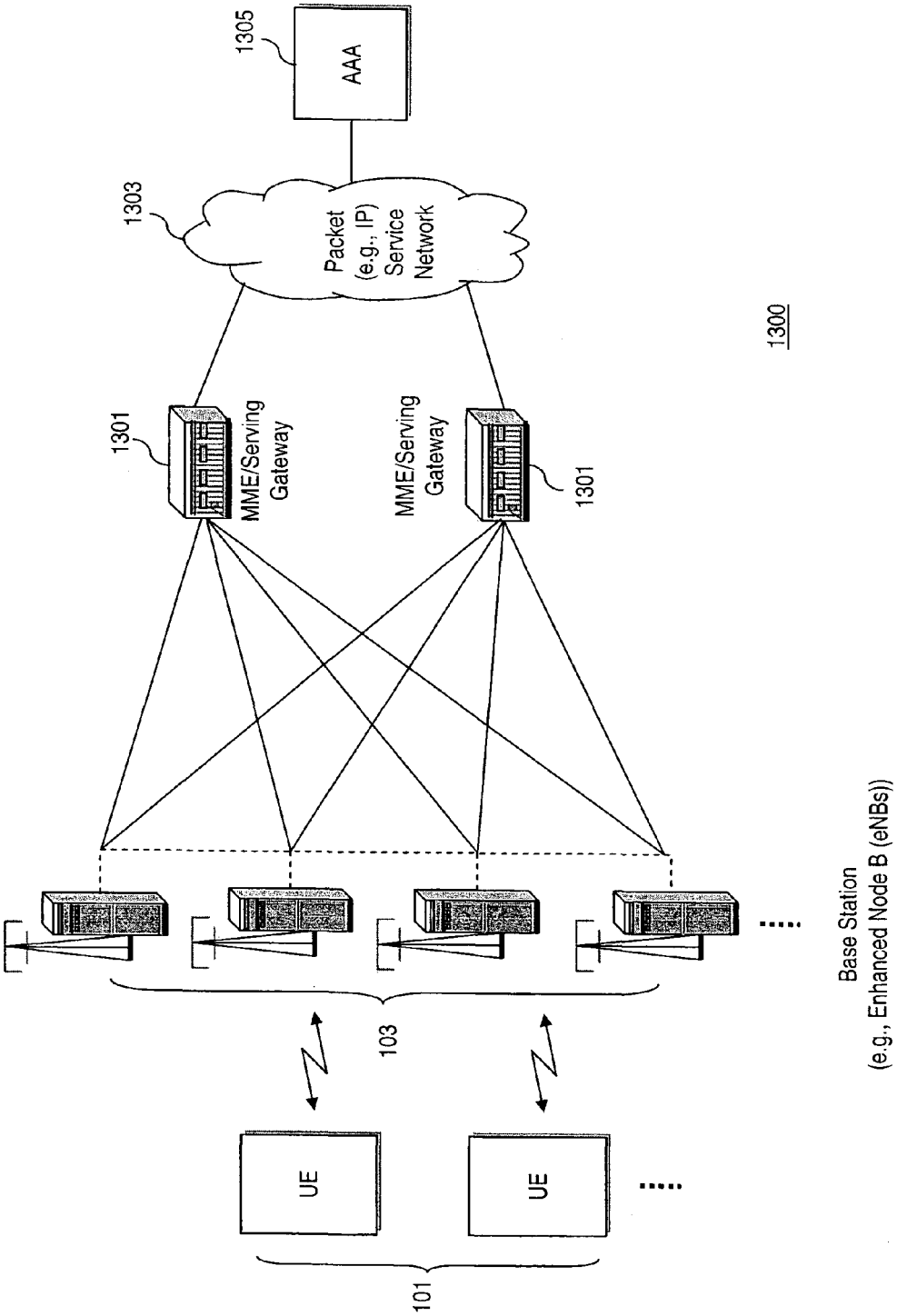
1305
AAA
1303
Packet (e.g., IP) Service Network
1300
1301
MME/Serving Gateway
MME/Serving Gateway
1301
Base Station (e.g., Enhanced Node B (eNBs))
103
UE
UE
101

FIG. 13A

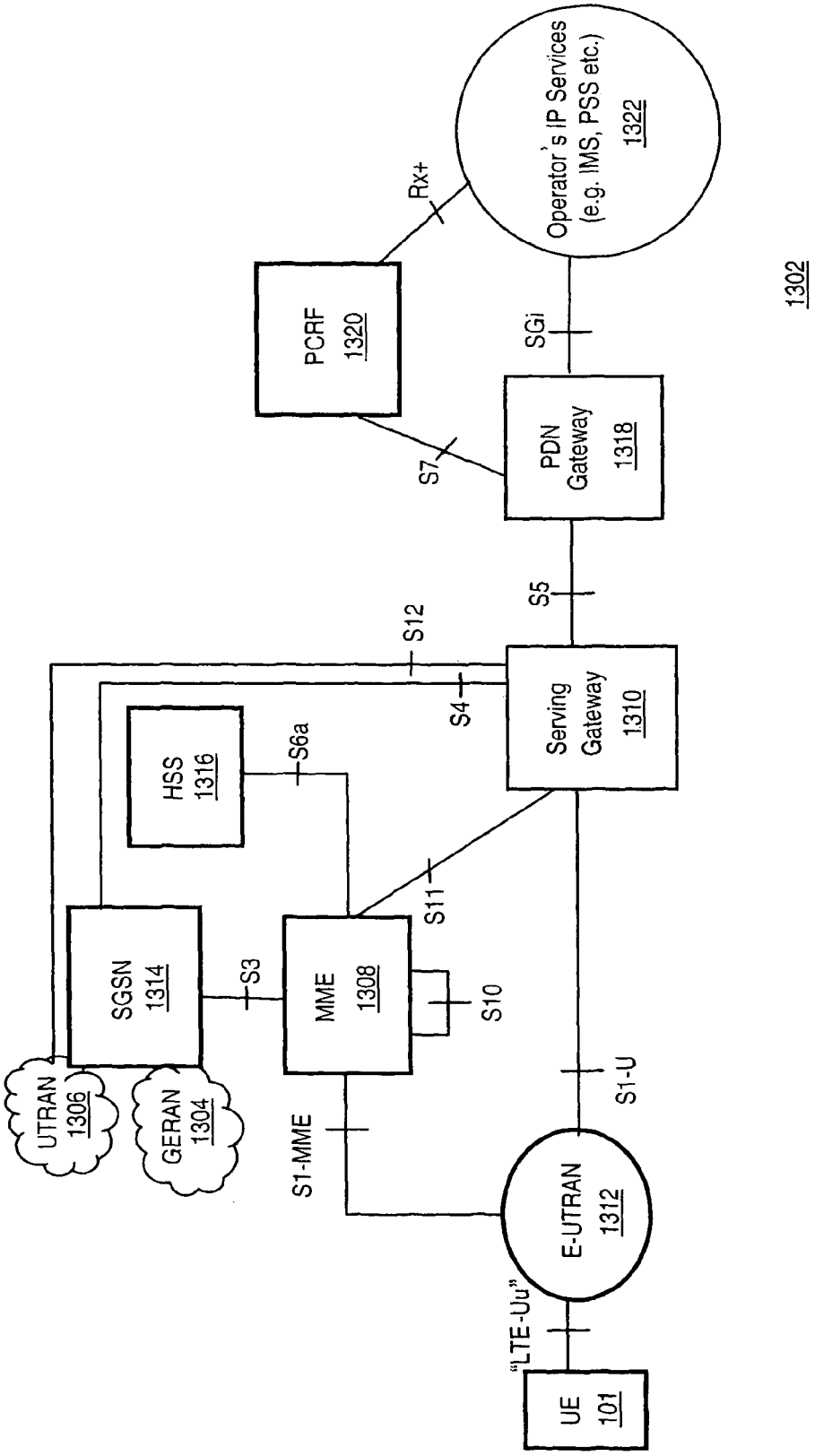
Operator's IP Services (e.g. IMS, PSS etc.) 1322
Rx+
PCRF 1320
SGi
S7
PDN Gateway 1318
S5
S12
S4
Serving Gateway 1310
HSS 1316
S6a
SGSN 1314
S3
MME 1308
S11
S10
UTRAN 1306
GERAN 1304
S1-MME
S1-U
E-UTRAN 1312
"LTE-Uu"
UE 101
1302

FIG. 13B

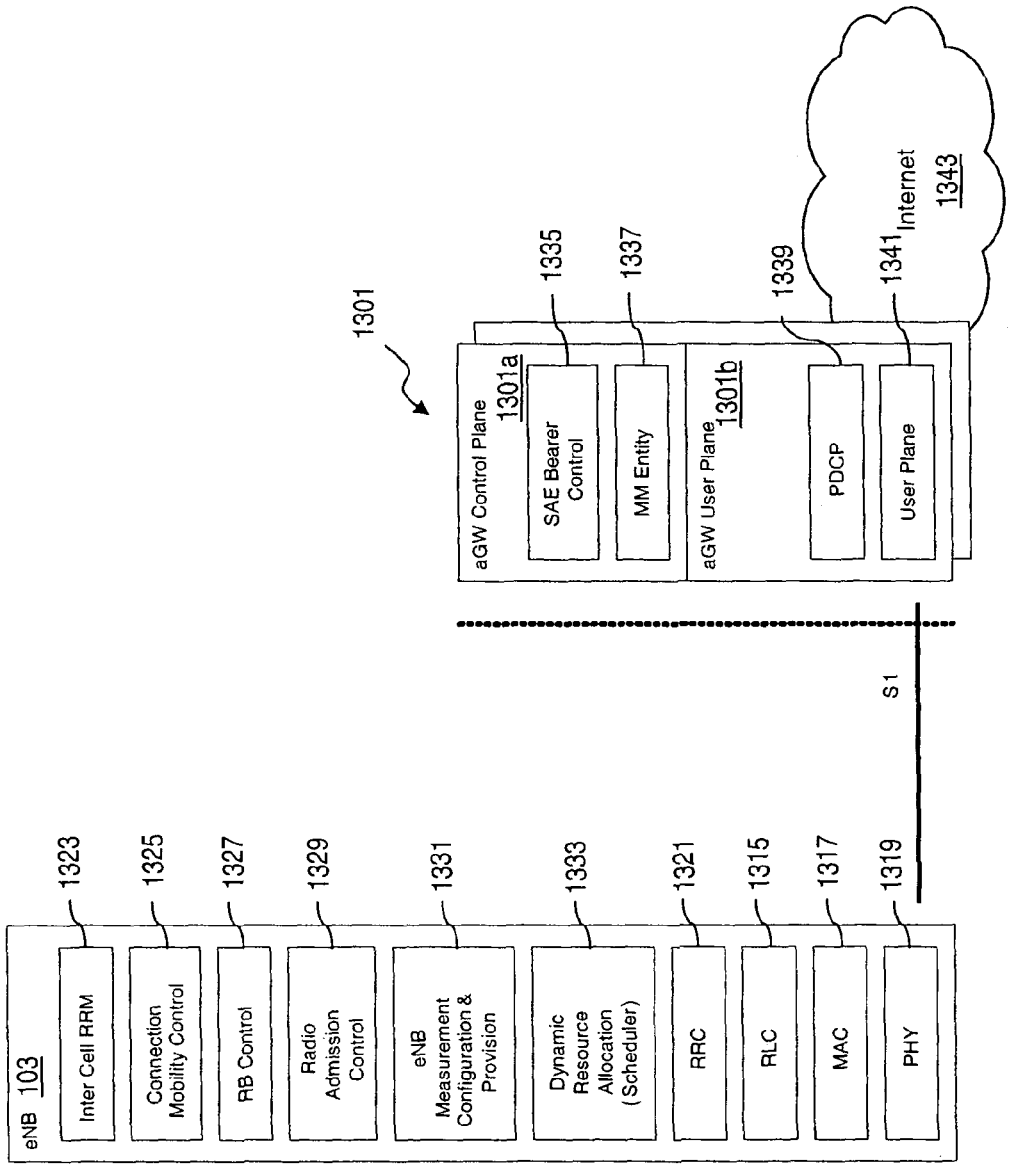
eNB 103
Inter Cell RRM
Connection Mobility Control
RB Control
Radio Admission Control
eNB Measurement Configuration & Provision
Dynamic Resource Allocation (Scheduler)
RRC
RLC
MAC
PHY
1323
1325
1327
1329
1331
1333
1321
1315
1317
1319
S1
1301
aGW Control Plane 1301a
SAE Bearer Control
MM Entity
aGW User Plane 1301b
PDCP
User Plane
1335
1337
1339
1341
Internet 1343

FIG. 13C

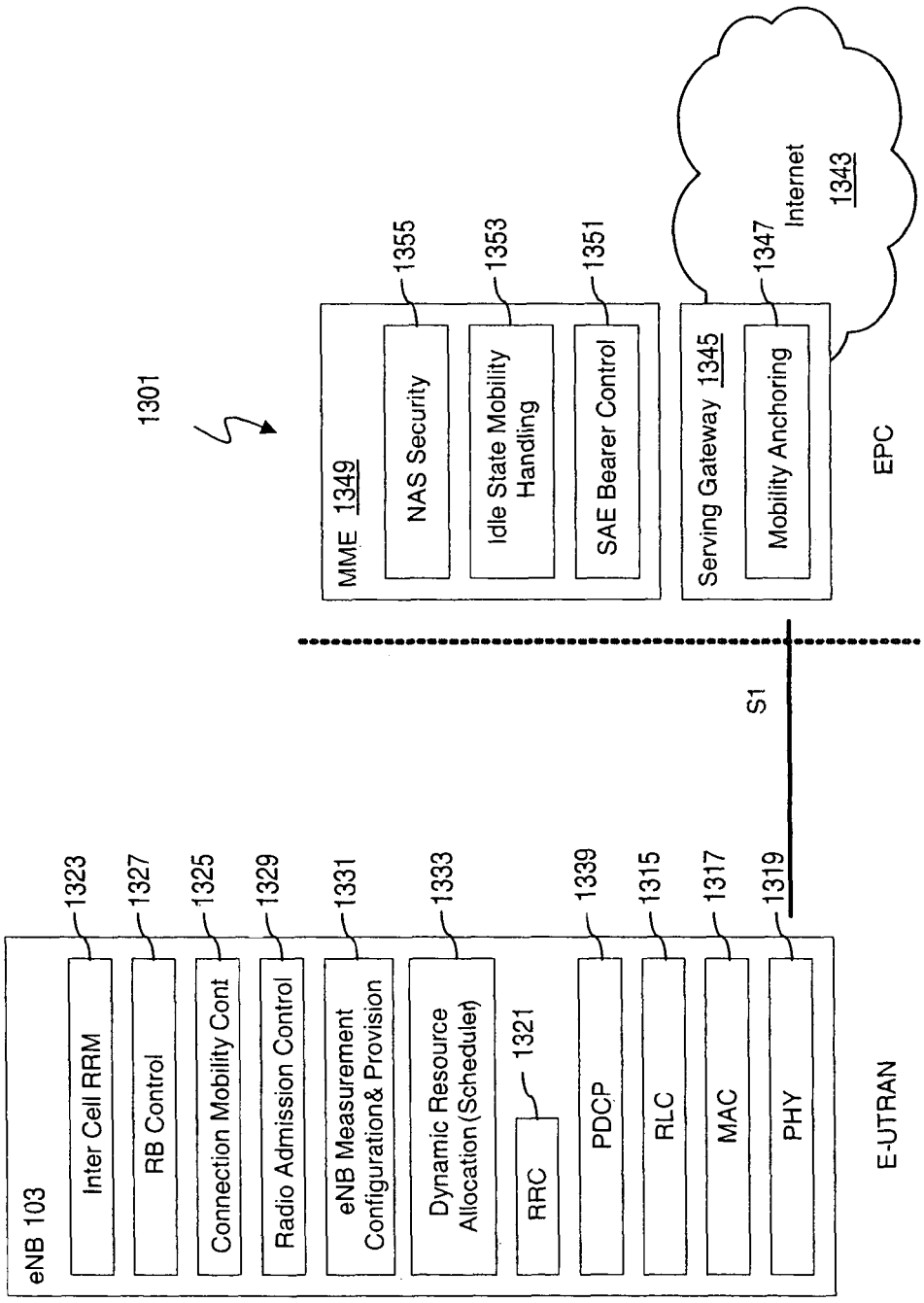
1301
eNB 103
Inter Cell RRM
1323
RB Control
1327
Connection Mobility Cont
1325
Radio Admission Control
1329
eNB Measurement Configuration& Provision
1331
Dynamic Resource Allocation (Scheduler)
1333
RRC
1321
PDCP
1339
RLC
1315
MAC
1317
PHY
1319
E-UTRAN
S1
MME 1349
NAS Security
1355
Idle State Mobility Handling
1353
SAE Bearer Control
1351
Serving Gateway 1345
Mobility Anchoring
1347
EPC
Internet
1343

FIG. 13D

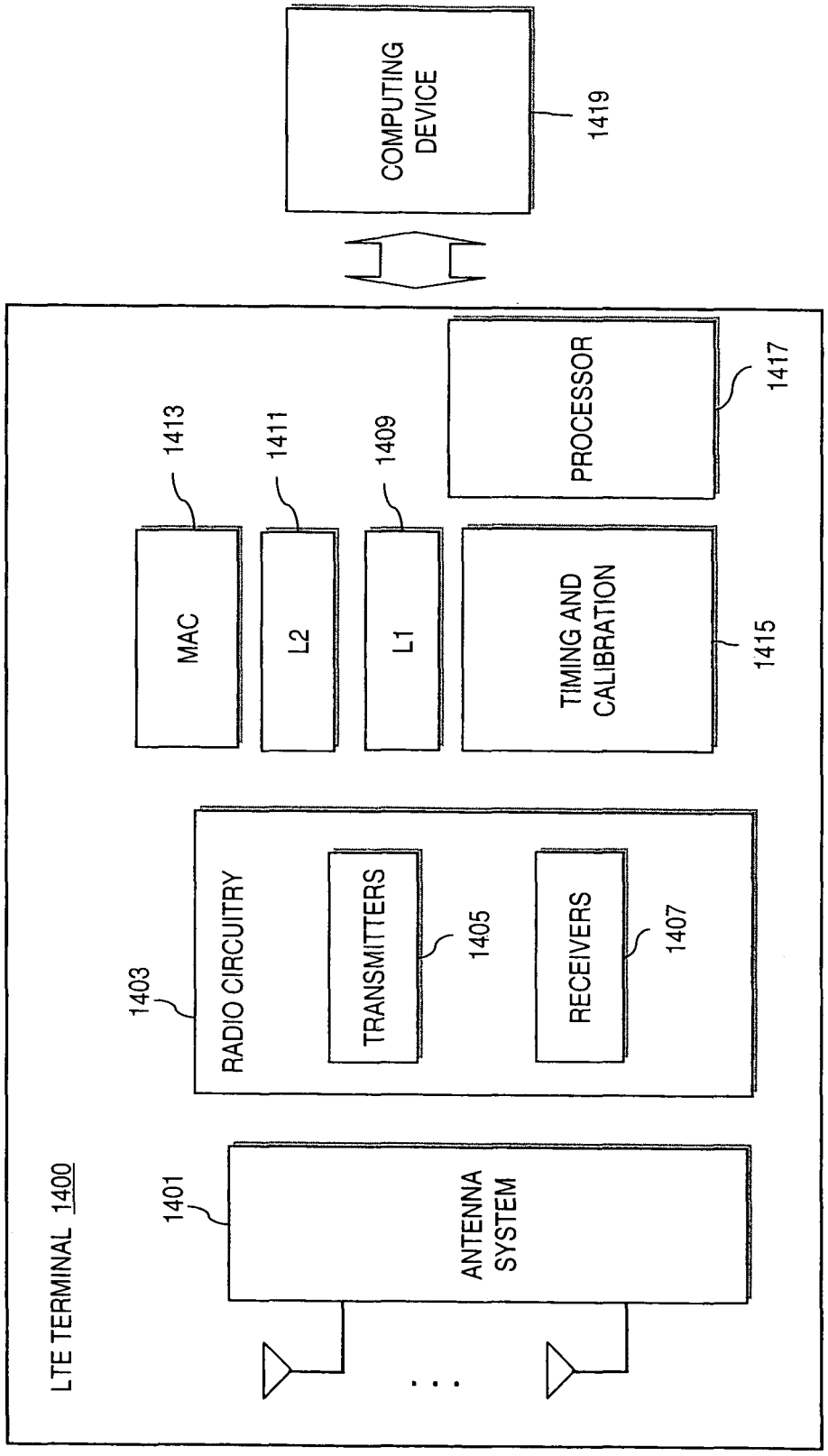
COMPUTING DEVICE
1419
LTE TERMINAL 1400
1401
ANTENNA SYSTEM
1403
RADIO CIRCUITRY
TRANSMITTERS
1405
RECEIVERS
1407
MAC
1413
L2
1411
L1
1409
TIMING AND CALIBRATION
1415
PROCESSOR
1417

FIG. 14

METHOD AND APPARATUS FOR PROVIDING TRANSMISSION RELAY USING SOFT SYMBOL ESTIMATION

RELATED APPLICATION

This application was originally filed as PCT Application No. PCT/IB2008/000390 filed Feb. 21, 2008.

BACKGROUND

Radio communication systems, such as a wireless data networks (e.g., Third Generation Partnership Project (3GPP) Long Term Evolution (LTE) systems, spread spectrum systems (such as Code Division Multiple Access (CDMA) networks), Time Division Multiple Access (TDMA) networks, etc.), provide users with the convenience of mobility along with a rich set of services and features. This convenience has spawned significant adoption by an ever growing number of consumers as an accepted mode of communication for business and personal uses. To promote greater adoption, the telecommunication industry, from manufacturers to service providers, has agreed at great expense and effort to develop standards for communication protocols that underlie the various services and features. One area of effort involves relaying data transmissions in a manner that ensures accuracy and efficient use of network resources. Relays are needed within a network to extend coverage and/or to preserve signal integrity.

SOME EXEMPLARY EMBODIMENTS

Therefore, there is a need for an approach for accurately relaying signals, while minimizing use of network resources, such as bandwidth.

According to one embodiment of the invention, a method comprises receiving a signal over a communication link and demodulating the signal. The method also comprises estimating soft symbols based on probability information corresponding to the demodulated signal. Further, the method comprises remodulating the demodulated signal based on the soft symbols, and outputting a relay signal based on the remodulated signal.

According to another embodiment of the invention, an apparatus comprises a demodulator configured to demodulate a signal received over a communication link. The apparatus also comprises a soft symbol estimator configured to estimate soft symbols based on probability information corresponding to the demodulated signal. The apparatus further comprises a re-modulator configured to remodulate the demodulated signal based on the soft symbols as a relay signal.

According to yet another embodiment of the invention, a system comprises a relay node configured to receive a signal over a communication link, to demodulate the signal, and to estimate soft symbols based on probability information corresponding to the demodulated signal. The relay node is further configured to remodulate the demodulated signal based on the soft symbols as a relay signal.

Still other aspects, features, and advantages of the invention are readily apparent from the following detailed description, simply by illustrating a number of particular embodiments and implementations, including the best mode contemplated for carrying out the invention. The invention is also capable of other and different embodiments, and its several details can be modified in various obvious respects, all without departing from the spirit and scope of the invention. Accordingly, the drawings and description are to be regarded as illustrative in nature, and not as restrictive.

BRIEF DESCRIPTION OF THE DRAWINGS

The embodiments of the invention are illustrated by way of example, and not by way of limitation, in the figures of the accompanying drawings:

FIGS. **1**A and **1**B are diagrams of a non-cooperative relay system and a cooperative relay system, respectively, according to various exemplary embodiments of the invention;

FIGS. **2**A and **2**B are diagrams of the components of the non-cooperative relay system and the cooperative relay system of FIGS. **1**A and **2**B, respectively, according to various exemplary embodiments of the invention;

FIG. **3** is a diagram of a relay node capable of providing soft symbol estimation, according to an exemplary embodiment;

FIG. **4** is a flowchart of a relay process utilizing soft symbol estimation, in accordance with an embodiment of the invention;

FIG. **5** is a diagram of graphs showing frame error rate (FER) performance comparison of various relay schemes involving binary phase shift keying (BPSK), in accordance with an embodiment of the invention;

FIG. **6** is a diagram of graphs showing performance comparisons of various relay schemes in which the performance relates to average latency, spectrum efficiency, and frame error rate (FER), in accordance with an embodiment of the invention;

FIG. **7** is a diagram of graphs showing frame error rate (FER) performance comparison of various relay schemes involving quadrature phase shift keying (QPSK) and 16-QAM (quadrature amplitude modulation), in accordance with an embodiment of the invention;

FIG. **8** is a diagram of graphs showing performance comparison of various relay schemes involving different signal-to-noise ratio (SNR) relationships of a link from source to relay (SR) and a link from source to destination (SD), in accordance with an embodiment of the invention;

FIG. **9** is a graph showing performance comparison of various relay schemes involving relaying of systematic bits and punctured parity bits, in accordance with an embodiment of the invention;

FIG. **10** is a diagram of graphs showing performance comparison of various relay schemes utilized in a non-cooperative relay system, in accordance with an embodiment of the invention;

FIG. **11** is a diagram of graphs showing peak-to-average ratio (PAR) performance comparison of various relay schemes, in accordance with an embodiment of the invention;

FIG. **12** is a diagram of hardware that can be used to implement an embodiment of the invention;

FIGS. **13**A-**13**D are diagrams of communication systems having exemplary long-term evolution (LTE) and E-UTRA (Evolved Universal Terrestrial Radio Access) architectures, in which the system of FIG. **1** can operate, according to various exemplary embodiments of the invention; and

FIG. **14** is a diagram of exemplary components of an LTE terminal capable of operating in the systems of FIGS. **13**A-**13**D, according to an embodiment of the invention.

DESCRIPTION OF PREFERRED EMBODIMENTS

An apparatus, method, and software for relaying using soft symbol estimation are disclosed. In the following

description, for the purposes of explanation, numerous specific details are set forth in order to provide a thorough understanding of the embodiments of the invention. It is apparent, however, to one skilled in the art that the embodiments of the invention may be practiced without these specific details or with an equivalent arrangement. In other instances, well-known structures and devices are shown in block diagram form in order to avoid unnecessarily obscuring the embodiments of the invention.

Although the embodiments of the invention are discussed with respect to a communication network having a Third Generation Partnership Project (3GPP) Long Term Evolution (LTE) architecture, it is recognized by one of ordinary skill in the art that the embodiments of the inventions have applicability to any type of communication system and equivalent functional capabilities.

FIGS. **1**A and **1**B are diagrams of a non-cooperative relay system and a cooperative relay system, respectively, according to various exemplary embodiments of the invention. A relayed transmission system provides transmission of signals from one terminal to another through a number of relays without using larger power at the transmitter. To improve the performance of a relayed transmission, cooperative schemes between terminals and relay nodes are employed: (1) relay technology for coverage extension (as shown in FIG. **1**A), and (2) relay technology for throughput enhancement (as shown in FIG. **1**B).

Under the first scenario, the relay system **100** is referred to as a non-cooperative relay system, while the second scenario is a cooperative relay system **110**. As seen in FIG. **1**A, the non-cooperative relay system **100** includes a source node **101** that generates a signal to a destination node **103** via a relay node **105**, which regenerates the transmitted signal to reach the destination node **103**. In this example, the first phase involves transmission of the signal to the relay node **105**, and then forwarded by the relay node **105** to the destination node **103** in the second phase.

As for the cooperative relay system **110**, in the first phase, a source node **101** transmits a signal to both a relay node **105** and a destination node **103**. The second phase involves the relay node **105** subsequently transmitting the received signal from the source node **101** to the destination node **103**. By receiving the signal from two entities (e.g., nodes **101**, **105**), the destination node **103** experiences increased throughput.

Two forwarding techniques are employed by the relay nodes **105**, **109**: Amplify and Forward (AF), and Decode (or Demodulate) and Forward (DF). In the Amplify and Forward (AF) scheme, the relay node **105** simply amplifies the source's signal and forwards the amplified signal to the destination **103**. In decode and forward (DF), this approach involves demodulating, decoding, re-encoding, re-modulating and forwarding the re-generated signal to the destination. Alternatively, a simplified form of DF operation, denoted demodulate and forward (DF), does not perform decoding, but demodulates and re-modulates the signal. As used herein, the term "DF" refers to either decode and forward, or demodulate and forward. Also, "static" DF refers to a relay node always forward received signals to the destination irrespective of whether the signal can be decoded correctly or not.

These relay systems **100**, **110** are further detailed below in FIGS. **2**A and **2**B.

FIGS. **2**A and **2**B are diagrams of the components of the non-cooperative relay system and the cooperative relay system of FIGS. **1**A and **2**B, respectively, according to various exemplary embodiments of the invention. As seen in FIG. **2**A, the source node **101** includes an encoder **201** that receives information bits and outputs codes, which are then punctured using a puncturer **203**. Thereafter, the encoded signal is modulated by a modulator **205** for transmission to the destination node **103** by way of the relay node **105**. Upon receiving the signal from the source node **101**, the relay node **105**, in this example, provides equalization using an equalizer **207**, which then feeds the equalized signal to a demodulator **209**. The demodulated signal can then be decoded using a decoder **211**. At this point, the relay node **105** determines whether there are any errors in the received signal by using, e.g., cyclic redundancy check (CRC).

If the CRC is valid, then hard decisions can be made by hard decision logic **213**. Re-encoding is performed by re-encoder **215**. The encoded signals are then punctured by puncturer **217**, and subsequently modulated by modulator **219**.

However, if the CRC results in an error, the signal is simply punctured by the puncturer **217**. It is noted that although puncturers **217** are shown as two separate entities, the puncturers **217** can be the same component. Thresholding logic **221** is then applied to the punctured codes, and fed to a soft re-modulator **223**. Subsequently, a power restriction module **225** ensures the signal does not exhibit a power level beyond a certain (configurable) level.

The relay node **105** can then forward the signal to the destination node **103**. At the destination **103**, equalization is applied using equalizer **227**. A demodulator/combiner **229** operates in conjunction with a buffer **231** to provide an input signal to a decoder **233**. Per FIG. **2**A, the buffer **231** stores transmissions associated with a Hybrid Automatic Repeat Request (HARQ) procedure. In an exemplary embodiment, HARQ is deployed between the source node **101** and the destination **103**.

One aspect of the 3GPP LTE system **100** is that an error control scheme referred to as Hybrid Automatic Repeat Request (HARQ) is utilized. The HARQ scheme basically combines ARQ protocols with forward-error-correction (FEC) schemes, to provide an error-control technique for wireless links. It is noted that different wireless technologies may utilize different HARQ schemes. HARQ can be used to increase the link and spectral efficiency of LTE, as HARQ allows the system **100**, **110** to operate at a relative high block error rate of the first transmissions. The HARQ scheme can be made part of the medium access control (MAC) layer and be enabled on a terminal by terminal basis.

The destination node **103** determines whether the decoded signal passes the CRC check; if so, a hard decision logic **235** outputs the bits corresponding to the received signal. Otherwise, the destination node **103** requests retransmission.

As for the cooperative relay system **110**, a key difference is that the destination node **103** receives signals, y_{SD} and y_{RD}, respectively, from both the source node **101** and the relay node **105** for processing by the demodulator/combiner **229**. At this stage, the destination node **103** determines whether the signals employ the same modulation and coding schemes. If the identical schemes are utilized, then the symbols are combined (using a symbol combiner **237**) and demodulated (via demodulator **239**). However, if different modulation and coding schemes are used, then separate demodulators **241**, **243** are used, wherein the bits associated with the demodulated signals are bit combined by bit combiner **245**.

Further details of the above system **100**, **110** are now provided. For explanatory purposes, the following notational conventions are utilized. Bold lowercase letters denote vectors, e.g., x. It is assumed that all vectors are row-vectors, but can be transposed into column vectors, e.g.,

x^T. Vector elements are plain lowercase letters with subscripts beginning at zeros, e.g., $x=\{x_0, x_1, \ldots x_{M-1}\}$. Also, the function $P_A(a)$ represents the probability of event A=a.

Because the non-cooperative relay system **110** is essentially a derivative of the cooperative relay system **100**, only the model for the cooperative relay system **100** is explained; as the non-cooperative relay system **110** can be specialized in a straight forward manner.

In the first phase (as shown in the cooperative relay system **110** of FIG. **1**B), a vector of message bits $u=\{u_0, u_1, \ldots, u_{K-1}\}$ in the source node **101** is passed through the encoder **201** (e.g., binary encoder) to produce a codeword $b=\{b_0, b_1, \ldots, b_{N-1}\}$. The codeword is then grouped and passed through an m-ordered modulator **205** (i.e., every m coded bits correspond to one symbol) to produce a vector of transmitted symbols

$$s=\left\{s_0, s_1, \ldots, s_{\frac{N}{m}-1}\right\}.$$

$b^k=\{b_0^k, b_1^k, \ldots, b_{m-1}^k\}$ denotes the m code bits corresponding to symbol s_k. The source node **101** broadcasts s to both the relay **105** and destination **103**.

Assuming the channel coefficient is fixed during a transmission block, the received signals at relay y_{sr} and destination y_{sd} are:

$$y_{sr,k}=h_{sr}s_k+n_{sr,k} \quad (1)$$

$$y_{sd,k}=h_{sd}s_k+n_{sd,k} \quad (2)$$

where h_{sr} and h_{sd} are the fading coefficients between source and relay and between source and destination, respectively. $n_{sr,k}$ and $n_{sd,k}$ are zero mean complex Gaussian white noises with variances σ_{sr}^2 and σ_{sd}^2, respectively.

According to one embodiment, the relay node **105** employs a static DF technique. The relay node **105** demodulates or decodes the received signal, but does not perform hard decisions. Instead, the relay node **105** uses the demodulated/decoded soft information to re-modulate to soft symbol and transmits such information in the second phase, which is denoted as $x_{r,k}$. The relay node **105** can employ the same modulation mode as the source node **101** or a different modulation mode according to, for example, the channel quality—i.e., AMC in the relay node **105**.

In the second phase, the signal received by destination can be written as:

$$y_{rd,k}=h_{rd}x_{r,k}+n_{rd,k} \quad (3)$$

where h_{rd} is the fading coefficients between relay and destination and $n_{rd,k}$ is a zero mean complex Gaussian white noises with variances σ_{rd}^2.

Destination combines the two versions of source signal y_{sd} and y_{rd} to decode and obtain the information.

In non-cooperative relay system **101**, the y_{sd} is ignored.

Under one conventional approach, the relay system **110** utilizes a soft information forwarding scheme for distributed turbo coding. The system **110** provides a Soft-in-Soft-out (SISO) convolution re-encoder, and a soft symbol calculation in the relay node **105**. With respect to the soft symbol calculation, by using the a posteriori probability (APP) of a coded bit, which is from either a SISO decoder or a SISO re-encoder, the relay node **105** can calculate the soft symbol corresponding to binary phase shift keying (BPSK) (e.g., the binary bit 0 is mapped into 1 and 1 is mapped into −1) in the following form:

$$\tilde{s}_k=P_{s|y_{sr}}(s_k=0|y_{sr})\times 1+P_{s|y_{sr}}(s_k=1|y_{sr})\times(-1) \quad (4)$$

An equivalent noise model for the soft estimates is as follows:

$$\tilde{s}_k=s_k(1-\tilde{n}_k) \quad (5)$$

where s_k is the exact transmitted symbol in source and $\tilde{n}_k$ is the equivalent noise, with the mean and variance estimated as follows:

$$\mu_n=\frac{1}{l}\sum_{k=1}^{l}|\tilde{s}_k-s_k| \quad (6)$$

$$\sigma_n^2=\frac{1}{l}\sum_{k=1}^{l}(1-\tilde{s}_k s_k-\mu_n) \quad (7)$$

Further, assuming the power restriction of relay is P_2, then relay transmits the following signal: $x_{r,k}=\beta\tilde{s}_k$, where

$$\beta=\sqrt{\frac{P_2}{E[|\tilde{s}_k|^2]}}.$$

The described conventional approach has a number of drawbacks. First, when estimating the mean and variance of the equivalent noise $\tilde{n}_k$, s_k is the exact transmitted symbol in the source **101**, which is not practical because the relay node **105** is not notified. Secondly, such an arrangement does not address higher order modulation, and thus does not support adaptive modulation and coding (AMC) in relay nodes, thereby reducing the efficiency of the system. Moreover, the performance of the soft modulation is poor.

It is recognized that the DF lacks the advantages of AF and vice versa: DF regenerates the signal and supports AMC in the relay nodes. However, if imperfect decoding occurs in the relay process, DF can loses information by incorrectly performing hard decision, which causes error propagation in the re-encoding. However, AF does not lose information or cause error propagation; this technique, unfortunately, amplifies noise as well as the signal and does not support AMC, which is significant to improving system throughput.

A dynamic DF relay technique overcomes the drawback of the original (or "static") DF technique by performing a cyclic redundancy check (CRC) after decoding. If CRC implies proper decoding, then the relay node will forward the signal to the destination node. Otherwise, the relay node will not forward the signal, but provide the appropriate feedback to the source node and wait for retransmission. Such dynamic DF technique can avoid error propagation while still exhibiting the advantages of the original DF.

The drawback, however, is that the relay node is required to use a relatively complex protocol, thereby causing some difficulty in resource allocation and interference management (e.g., within the base station (BS)). Notably, in a centralized scheduling system in which the BS has the responsibility for resource allocation, any transmission or retransmission requests as sent to the BS for granting of resources. Under this scenario, bandwidth can be wasted when the relay node decodes erroneously, and has to request retransmission from the source node instead of forwarding data to the destination; that is, the resource having been already allocated by the BS to the link from the relay node to the destination is wasted. Furthermore, the retransmission request has to be sent to the BS, which may introduce greater latency.

In view of the above drawbacks, a soft symbol estimation scheme is provided in the Decode/Demodulate and Forward (DF) relay technique to improve performance, as explained with respect to FIG. **3**.

FIG. **3** is a diagram of a relay node capable of providing soft symbol estimation, according to an exemplary embodiment. A relay node **105** can be deployed in either of the systems **100**, **110** in FIG. **1**. The relay node **105** provides a soft symbol estimator **301** to enhance the traditional DF scheme. Also, the relay node **105** includes a demodulator **303** as well as an optional decoder **305** (which is utilized in a decode and forward technique). A re-encoder **307** is provided, if the decoder **305** exists. Further, the relay node **105** has a re-modulator **309**.

This arrangement, according to various embodiments, combines the main advantages of both AF and DF to optimize the performance of relay technology with minimum cost.

FIG. **4** is a flowchart of a relay process utilizing soft symbol estimation, in accordance with an embodiment of the invention. This process is a soft symbol estimation scheme, which can be employed in a Decode/Demodulate and Forward (DF) relay technique to improve the performance in both scenarios of relay systems **100**, **110**. According to certain embodiments, the soft symbol estimation scheme provides both the advantages of AF and DF techniques, and can provide a general approach for any modulation scheme (and can further support relay AMC).

In step **401**, the relay node **105** receives a signal from the source node **101**. It is assumed that the relay node **105** knows the exact channel coefficient of link SR. When receiving y_{sr}, the relay node **105** first performs channel equalization (step **403**):

$$z_k = \frac{y_{sr,k}}{h_{sr}} = s_k + \frac{n_{sr,k}}{h_{sr}} \tag{8}$$

where

$$\frac{n_{sr,k}}{h_{sr}}$$

is the equivalent zeros mean complex Gaussian white noise with equivalent variance

$$\sigma^2_{sr,E} = \frac{\sigma^2_{sr}}{\|h_{sr}\|^2}.$$

z is then passed through demodulator **303**, decoder (e.g., SISO) **305** and re-encoder (e.g., SISO) **307**. Thereafter, the 'a posteriori probability (APP)' of coded bits $P_{b^k|z}(b_i^k=q|z)$ is computed, as in step **405**, from demodulator **303**, SISO decoder **305** or SISO re-encoder **307**. Next, the probability information can be put through a predetermined threshold before performing the soft estimation—e.g., APP values that are larger than the threshold are set as the threshold value to reduce peak-to-mean ratio value (as in step **406**). The APPs of code bits are used to estimate the soft symbols $\tilde{s}_k$, which are to be transmitted by the relay node **105** (per steps **407** and **409**).

The soft symbol estimation process is explained as follows. First, the relationship between APP of code bits and APP of the corresponding symbols is expressed as:

$$P_{b^k|z}(b_i^k = q \mid z) = \sum_{\substack{x\in S \\ b_i^k(x)=q}} P_{s_k|z}(s_k = x \mid z), \tag{9}$$

where S is the candidate constellation set of symbol s_k, $b_i^k(x)=q$ denotes s_k takes the constellation point x whose corresponding b_i^k equals q, i=0, 1, . . . , m−1 and m refers to the modulation order.

Applying Byers expression and assuming the transmitted symbol is uniformly distributed, the following is obtained:

$$\begin{aligned} P_{s_k|z}(s_k = x \mid z) &= \frac{P_{z_k|s_k}(z_k \mid s_k = x)P_{s_k}(s_k = x)}{P_z(z)} \\ &= \frac{P_{z_k|s_k}(z_k \mid s_k = x)P_{s_k}(s_k = x)}{\sum_{a\in S} P_{z_k|s_k}(z_k \mid s_k = a)P_{s_k}(s_k = a)} \\ &= \frac{P_{z_k|s_k}(z_k \mid s_k = x)}{\sum_{a\in S} P_{z_k|s_k}(z_k \mid s_k = a)} \\ &= \frac{\exp\left(-\frac{(z_{k,R}-x_R)^2+(z_{k,I}-x_I)^2}{2\sigma^2_{sr,E}}\right)}{\sum_{a\in S}\exp\left(-\frac{(z_{k,R}-a_R)^2+(z_{k,I}-a_I)^2}{2\sigma^2_{sr,E}}\right)} \\ &= \frac{1}{C}\exp\left(-\frac{(z_{k,R}-x_R)^2+(z_{k,I}-x_I)^2}{2\sigma^2_{sr,E}}\right), \end{aligned} \tag{10}$$

where

$$C = \sum_{a\in S}\exp\left(-\frac{(z_{k,R}-a_R)^2+(z_{k,I}-a_I)^2}{2\sigma^2_{sr,E}}\right)$$

is a constant over a symbol, $(\bullet)_R$ and $(\bullet)_I$ refers to the real part and imaginary part of (•), respectively.

From (9) and (10), this yields the following:

$$\begin{aligned} p_{b^k|z}(b_i^k = q \mid z) &= \sum_{\substack{x\in S \\ b_i^k(x)=q}} P_{s_k|z}(s_k = x \mid z) \\ &= \frac{1}{C}\sum_{\substack{x\in S \\ b_i^k(x)=q}} \exp\left(-\frac{(z_{k,R}-x_R)^2+(z_{k,I}-x_I)^2}{2\sigma^2_{sr,E}}\right) \\ &= \frac{\sum_{\substack{x\in S \\ b_i^k(x)=q}} \exp\left(-\frac{(z_{k,R}-x_R)^2+(z_{k,I}-x_I)^2}{2\sigma^2_{sr,E}}\right)}{\sum_{a\in S}\exp\left(-\frac{(z_{k,R}-a_R)^2+(z_{k,I}-a_I)^2}{2\sigma^2_{sr,E}}\right)} \end{aligned} \tag{11}$$

where $b^k=\{b_0^k, b_1^k, \ldots, b_{m-1}^k\}$ denotes the m code bits corresponding to symbol s_k.

Assuming the modulation order is m and the code bits $b_i^k \epsilon GF(r)$, m×r equations are obtained from (11) for each symbol. Since there is only one unknown variable z_k in each equation, it is easy to solve the equations and get different candidates from different equations $\{z_k^0, z_k^1, \ldots, z_k^M \ldots\}$. It is noted that various methods, according to

certain embodiments, can be applied to combine these candidates to obtain the corresponding soft symbol estimate:

$$\tilde{s}_k = F(z_k^0, z_k^1, \ldots, z_k^M \ldots) \tag{12}$$

According to the above principle, one approach is as follows. If a binary encoder is applied, then

$$\frac{P_{b^k|z}(b_i^k = 1 \mid z)}{P_{b^k|z}(b_i^k = 0 \mid z)} = \frac{\sum_{\substack{x \in S \\ b_i^k(x)=1}} \exp\left(-\frac{(z_{k,R} - x_R)^2 + (z_{k,I} - x_I)^2}{2\sigma_{sr,E}^2}\right)}{\sum_{\substack{x \in S \\ b_i^k(x)=0}} \exp\left(-\frac{(z_{k,R} - x_R)^2 + (z_{k,I} - x_I)^2}{2\sigma_{sr,E}^2}\right)} \tag{13}$$

where k=0, 1, . . . , m−1, m refers to the modulation order.

The soft symbol $\tilde{s}_k$ can be readily computed as follows:

$$\tilde{s}_k = \underset{z}{\operatorname{argmin}} \sum_{i=0}^{m-1} \alpha_i \left| LR_i - \frac{\sum_{\substack{x \in S \\ b_i^k(x)=1}} f(z, x)}{\sum_{\substack{x \in S \\ b_i^k(x)=0}} f(z, x)} \right|^p, \tag{14}$$

where

$$LR_i = \frac{P_{b^k|z}(b_i^k = 1 \mid z)}{P_{b^k|z}(b_i^k = 0 \mid z)}, \quad f(z, x) = \exp\left(-\frac{(z_R - x_R)^2 + (z_I - x_I)^2}{2\sigma_{sr,E}^2}\right),$$

α_i is the weight factor of each code bit b_i^k corresponding to the soft symbol $\tilde{z}_k$, and p is the power index of the absolute error. α_i and p are parameters that depend on which criteria are employed to solve (14). For example, if the code bits have the same reliability and MMSE criteria is employed, then α_i=1 and p=2.

From equation (14), the soft symbol can be estimated for any modulation according to the mapping pattern. According to certain embodiments, the following modulation schemes are described: BPSK, QPSK, and 16QAM. With BPSK, if the binary bit 0 is mapped into 1 and 1 is mapped into −1, then the soft symbol estimation is:

$$\tilde{s}_k = -\frac{1}{2} \cdot \ln\left(\frac{P_{b^k|z}(b^k = 1 \mid z)}{P_{b^k|z}(b^k = 0 \mid z)}\right) \times \sigma_{sr,E}^2, \tag{15}$$

In the case of QPSK, if the binary sequence b_0b_1 is mapped in the following pattern (as listed in Table 1):

TABLE 1

00	01	10	11
$\frac{\sqrt{2}}{2}(1 + j)$	$\frac{\sqrt{2}}{2}(1 - j)$	$\frac{\sqrt{2}}{2}(-1 + j)$	$\frac{\sqrt{2}}{2}(-1 - j)$

then the soft symbol estimation is:

$$\tilde{s}_k = -\frac{\sqrt{2}}{2} \ln\left(\frac{P_{b^k|z}(b_0^k = 1 \mid z)}{P_{b^k|z}(b_0^k = 0 \mid z)}\right) \times \sigma_{sr,E}^2 - j \cdot \frac{\sqrt{2}}{2} \ln\left(\frac{P_{b^k|z}(b_1^k = 1 \mid z)}{P_{b^k|z}(b_1^k = 0 \mid z)}\right) \times \sigma_{sr,E}^2, \tag{16}$$

As for 16QAM, if the binary sequence $b_0b_1b_2b_3$ is mapped in the following pattern:

TABLE 2

0000	0100	1000	1100
$AM_1 + j \cdot AM_1$	$AM_3 + j \cdot AM_1$	$-AM_1 + j \cdot AM_1$	$-AM_3 + j \cdot AM_1$
0001	0101	1001	1101
$AM_1 + j \cdot AM_3$	$AM_3 + j \cdot AM_3$	$-AM_1 + j \cdot AM_3$	$-AM_3 + j \cdot AM_3$
0010	0110	1010	1110
$AM_1 - j \cdot AM_1$	$AM_3 - j \cdot AM_1$	$-AM_1 - j \cdot AM_1$	$-AM_3 - j \cdot AM_1$
0011	0111	1011	1111
$AM_1 - j \cdot AM_3$	$AM_3 - j \cdot AM_3$	$-AM_1 - j \cdot AM_3$	$-AM_3 - j \cdot AM_3$,

where $AM_1=1/\sqrt{10}$ and $AM_3=3/\sqrt{10}$, then the soft symbol estimation for 16QAM is:

$$\tilde{s}_k = \underset{x}{\operatorname{argmin}} \left(\alpha_1 \left| \frac{P_{b^k|z}(b_0^k = 1 \mid z)}{P_{b^k|z}(b_0^k = 0 \mid z)} - g_1(x) \right|^p + \alpha_2 \left| \frac{P_{b^k|z}(b_1^k = 1 \mid z)}{P_{b^k|z}(b_1^k = 0 \mid z)} - g_2(x) \right|^p \right) + j \cdot \underset{x}{\operatorname{argmin}} \left(\alpha_1 \left| \frac{P_{b^k|z}(b_2^k = 1 \mid z)}{P_{b^k|z}(b_2^k = 0 \mid z)} - g_1(x) \right|^p + \alpha_2 \left| \frac{P_{b^k|z}(b_3^k = 1 \mid z)}{P_{b^k|z}(b_3^k = 0 \mid z)} - g_2(x) \right|^p \right) \tag{17}$$

$$\text{where } g_1(x) = \frac{\exp\left(-\frac{(x - AM_1)^2}{2\sigma_{sr,E}^2}\right) + \exp\left(-\frac{(x - AM_3)^2}{2\sigma_{sr,E}^2}\right)}{\exp\left(-\frac{(x + AM_1)^2}{2\sigma_{sr,E}^2}\right) + \exp\left(-\frac{(x + AM_3)^2}{2\sigma_{sr,E}^2}\right)}$$

$$g_2(x) = \frac{\exp\left(-\frac{(x - AM_1)^2}{2\sigma_{sr,E}^2}\right) + \exp\left(-\frac{(x + AM_1)^2}{2\sigma_{sr,E}^2}\right)}{\exp\left(-\frac{(x - AM_3)^2}{2\sigma_{sr,E}^2}\right) + \exp\left(-\frac{(x + AM_3)^2}{2\sigma_{sr,E}^2}\right)},$$

In another approach (referred to as "LR Threshold"), the soft re-modulation function may result in a high peak-to-mean ratio problem since the output from demodulator **303** or SISO decoder **305** (or SISO re-encoder)

$$LR_i = \frac{P_{b^k|z}(b_i^k = 1 \mid z)}{P_{b^k|z}(b_i^k = 0 \mid z)}$$

varies in a large region.

Therefore, a threshold is employed on the output LRs before the soft symbol estimation function **301**, such that values larger than the threshold are set as the value of threshold.

In another approach (denoted as "power restriction"), it is assumed that the power restriction of relay is P_2, whereby the relay node **105** transmits the following signal:

$$x_{r,k} = \beta \tilde{s}_k, \text{ where } \beta = \sqrt{\frac{P_2}{E[|\tilde{s}_k|^2]}} \tag{18}$$

In yet another approach ("destination operation"), according to the soft symbol estimate function **301**, the transmitted signal from the relay node **105** can be expressed as:

$$x_{r,k} = \beta \tilde{s}_k = \beta\left(s_k + \frac{n_{sr,k}}{h_{sr}}\right).$$

The signal from the relay node **105** received by the destination node **103** is the following:

$$y_{rd,k} = h_{rd} x_{r,k} + n_{rd} \tag{19}$$
$$= h_{rd}\beta\left(s_k + \frac{n_{sr,k}}{h_{sr}}\right) + n_{rd} = h_{rd}\beta s_k + \left(h_{rd}\beta\frac{n_{sr,k}}{h_{sr}} + n_{rd}\right)$$

where the equivalent noise variance $\sigma_E^2 = \|h_{rd}\|^2\beta^2\sigma_{sr,E}^2 + \sigma_{rd}^2$.

In the cooperative relay system **110** (FIG. **2**B), the destination node **103** combines the two versions y_{rd} and y_{sd} in symbol level if the same modulation is applied in both source and relay or in bit lever if different modulations are applied in source and relay.

In the non-cooperative relay system **100** (FIG. **2**A), the destination node **103** only operates on y_{rd}.

Under another approach, a hybrid scheme can be employed to optimize the performance. There are two aspects to this approach. First involves the "hybrid" of the original modulation and the soft symbol estimation within the relay node **105**. As such, the relay node **105** may calculate the CRC after decoding. If CRC implies correct, relay will perform the original modulation on the forwarding bits. Otherwise, the relay node **105** performs the soft symbol estimation on the forwarding bits.

The second aspect pertains to which part of the coded bits is to be forwarded in advance by the relay node **105**. If the relay node **105** decodes correctly, the punctured parity bits forwarded first. Otherwise, the systematic bits are forwarded by the relay node **105** ahead of time.

The above arrangement, according to certain embodiments, exhibits enhance performance over traditional relay techniques, as shown in FIGS. **5**-**11**.

FIG. **5** is a diagram of graphs showing frame error rate (FER) performance comparison of various relay schemes involving binary phase shift keying (BPSK), in accordance with an embodiment of the invention. For the purposes of illustration, the configuration involving static DF with original modulation is denoted "static Hard DF", while static DF with soft symbol estimation is referred to as "static Soft DF."

Performance of the static soft DF process of FIG. **4** are compared with a conventional soft information forwarding scheme, conventional AF, static Hard DF and dynamic DF scheme. In the simulations of FIGS. **5**-**11**, the simulation parameters for a cooperative relay configuration are listed in Table 3.

TABLE 3

Modulation	1) Source: BPSK; Relay: BPSK 2) Source: QPSK; Relay: 16QAM
Channel S to D	1) SNR_sr-SNR_sd = 0
Channel S to R	2) SNR_sr-SNR_sd = −3 dB 3) SNR_sr-SNR_sd = +3 dB 4) SNR_sr-SNR_sd = +6 dB
Channel R to D	SNR_sd is fixed and assumed to be quite good.
Channel model	1) Gaussian channel 2) Rayleigh block fading channel
Code length (K)	1000
Channel coding	Source: (13, 11) ½ Turbo codes (puncturing half parity bits) Relay: 1) forward K systematic bits 2) forward K punctured parity bits
LR threshold	Exp^5
HARQ	1) No HARQ 2) IR HARQ, Maximum retransmission number = 1
Soft symbol estimation parameter	$\alpha_i = 1$ p = 2

The simulation results for a cooperative relay system are illustrated in FIGS. **5**-**9**.

As for a non-cooperative relay system, the following simulation parameters are provided in below in Table 4.

TABLE 4

Modulation	Source: BPSK; Relay: BPSK
Channel model	Gaussian channel
Code length (K)	1000
Channel coding	Source: (13, 11) ½ Turbo codes (puncturing half parity bits) Relay: same code as source
LR threshold	Exp^5
HARQ	IR Maximum retransmission number = 1
Soft symbol estimation parameter	$\alpha_i = 1$ p = 2

The simulation result on non-cooperative relay system is illustrated in FIG. **10**.

Although the soft modulation approach, according to certain embodiments, can result in larger PAR than conventional modulation techniques, this concern is negligible if adopted in an OFDM system whose PAR is large (shown in FIG. **11**).

FIG. **5** shows the simulation results of FER performance in different schemes, where BPSK is adopted in both the source node **101** and the relay node **105**. It is noted that this particular simulation does not utilize HARQ. Graph **501** shows FER in an AWGN channel, while graph **503** shows performance in a Rayleigh block fading channel. In graph **501** (from the top down), the curves are static hard DF scheme, AF scheme, hybrid AF/DF scheme (i.e., if the relay node **105** decodes correctly, the node **105** operates in hard DF mode; otherwise, the node **105** operates in an AF mode.), a conventional soft DF, and the new soft DF scheme. As observed, the new scheme achieves significant gain compare to the other schemes. In graph **503**, the result is similar to that of the AWGN channel case of graph **501**; however, only the performance of static hard DF scheme, conventional soft DF scheme, and the new soft DF scheme is shown.

FIG. **6** is a diagram of graphs showing performance comparisons of various relay schemes in which the performance relates to average latency, spectrum efficiency, and forward error rate (FER), in accordance with an embodiment of the invention. The simulation curves of dynamic DF, the proposed static soft DF without and with HARQ are provided. The new static soft DF scheme with HARQ provides the best performance in FER (graph **601**), spectrum efficiency (graph **603**), and latency delay (graph **605**).

FIG. **7** is a diagram of graphs showing frame error rate (FER) performance comparison of various relay schemes involving quadrature phase shift keying (QPSK) and 16-QAM (quadrature amplitude modulation), in accordance with an embodiment of the invention. The simulation results in the case involves AMC being performed in the relay node **105**; specifically, the relay node **105** employs 16QAM instead of QPSK (which is applied in the source node **101**, namely because the channel from the relay to destination is good so that system efficiency can be improved). This simulation is without HARQ. Graph **701** is the FER for an AWGN channel, and graph **703** relates to a Rayleigh block fading channel. These graphs **701**, **703** reveal that the new soft DF scheme achieves considerably more gain as compared to static Hard DF scheme, in part because the new soft DF scheme addresses error propagation and maintains soft information.

FIG. **8** is a diagram of graphs showing performance comparison of various relay schemes involving different signal-to-noise ratio (SNR) relationships of a link from source to relay (SR) and a link from source to destination (SD), in accordance with an embodiment of the invention. The simulations of graphs **501-503**, **601-605**, and **701-703** are all performed in the case in which the SNR in channel SR is the same as that of the channel SD. Thus, graphs **801-805** compare the performance in different relationship of SNR in channel SR and channel SD; the simulation provides no HARQ. From left to right, graphs **801-805** are FER curves in cases that SNR_SR−SNR_SD=−3 dB, SNR_SR−SNR_SD=+3 dB and SNR_SR−SNR_SD=+6 dB, respectively. In these cases, the new soft DF scheme outperforms the static hard DF scheme; it noted that the performance gap is narrowed from as the SNR_SR and SNR_SD differences increase. In particular, from graph **801** the following conclusion can be reached: even if the channel from source to relay is much worse, the relay employing the new soft DF scheme can still provide significant benefit to the destination compared to the case in which only a direct link employed. By contrast, the relay employing static HardDF provides no gain—in fact, may even corrupt the transmission from direct link.

FIG. **9** is a graph showing performance comparison of various relay schemes involving relaying of systematic bits and punctured parity bits, in accordance with an embodiment of the invention. Graph **901** shows the FER performance of static HardDF and the new static Soft DF scheme in the cases of relay forwarding systematic bits and punctured parity bits. The results suggest that if imperfect decoding occurs in the relay node **105**, such decoding prior to forwarding of systematic bits rather than punctured parity bits. This conclusion is contrary to the case in which the relay decodes correctly. The same conclusion also holds true for a non-cooperative relay system.

FIG. **10** is a diagram of graphs showing performance comparison of various relay schemes utilized in a non-cooperative relay system, in accordance with an embodiment of the invention.

Graphs **1001-1011** show the simulation results of the new static SoftDF, static HardDF and dynamic DF scheme in a non-cooperative relay system. Specifically, graphs **1001-1005** pertain to FER, spectrum efficiency, and average latency, respectively, in the case of SNR_{SR} of −4 dB; while graphs **1007-1011** relates to the case of SNR_{SR} of −3 dB. The results indicate that the static Hard DF is not effective if the channel from the source node **101** to the relay node **105** is very poor because of error propagation. The new static SoftDF outperforms dynamic DF in FER, spectrum efficiency and latency delay in any channel conditions.

FIG. **11** is a diagram of graphs showing peak-to-average ratio (PAR) performance comparison of various relay schemes, in accordance with an embodiment of the invention. Graphs **1101** and **1103** show the PAR performance of static HardDF, conventional Soft DF, and the new SoftDF schemes in OFDM system. Graph **1101** is for the OFDM symbol length equals 256, while graph **1103** is for 512. The result shows that the three schemes have nearly the same PAR.

From the simulation curves of the FIGS. **5-11**, the following conclusions can be made. The soft symbol estimation scheme outperforms the conventional AF, static HardDF, the hybrid AF/DF, dynamic DF, and the conventional soft re-modulation scheme in FER, spectrum efficiency and latency delay for any modulation pattern no matter whether the channel is AWGN or Rayleigh block fading.

As evident from the discussion, the soft symbol estimation scheme can be used effectively in cooperative and non-cooperative relay systems. In an exemplary embodiment, the soft symbol estimation scheme is applied only in the relay node **105**, and is transparent to the source node **101** and the destination node **103**. Thus, this approach does not increase operational complexity in the source node **101** or the destination node **103**. The increase in complexity within the relay node **105** to provide the soft re-modulation function is found to be negligible. Additionally, the soft symbol estimation scheme can support AMC in both the source node **101** as well as the relay node **105**. Consequently, the source node **101** and the relay node **105** can utilize the same or different modulation, as this does not impact use of the soft symbol estimation scheme.

One of ordinary skill in the art would recognize that the processes associated with relaying may be implemented via software, hardware (e.g., general processor, Digital Signal Processing (DSP) chip, an Application Specific Integrated Circuit (ASIC), Field Programmable Gate Arrays (FPGAs), etc.), firmware, or a combination thereof. Such exemplary hardware for performing the described functions is detailed below with respect to FIG. **12**.

FIG. **12** illustrates exemplary hardware upon which various embodiments of the invention can be implemented. A computing system **1200** includes a bus **1201** or other communication mechanism for communicating information and a processor **1203** coupled to the bus **1201** for processing information. The computing system **1200** also includes main memory **1205**, such as a random access memory (RAM) or other dynamic storage device, coupled to the bus **1201** for storing information and instructions to be executed by the processor **1203**. Main memory **1205** can also be used for storing temporary variables or other intermediate information during execution of instructions by the processor **1203**. The computing system **1200** may further include a read only memory (ROM) **1207** or other static storage device coupled to the bus **1201** for storing static information and instructions for the processor **1203**. A storage device **1209**, such as

a magnetic disk or optical disk, is coupled to the bus **1201** for persistently storing information and instructions.

The computing system **1200** may be coupled via the bus **1201** to a display **1211**, such as a liquid crystal display, or active matrix display, for displaying information to a user. An input device **1213**, such as a keyboard including alphanumeric and other keys, may be coupled to the bus **1201** for communicating information and command selections to the processor **1203**. The input device **1213** can include a cursor control, such as a mouse, a trackball, or cursor direction keys, for communicating direction information and command selections to the processor **1203** and for controlling cursor movement on the display **1211**.

According to various embodiments of the invention, the processes described herein can be provided by the computing system **1200** in response to the processor **1203** executing an arrangement of instructions contained in main memory **1205**. Such instructions can be read into main memory **1205** from another computer-readable medium, such as the storage device **1209**. Execution of the arrangement of instructions contained in main memory **1205** causes the processor **1203** to perform the process steps described herein. One or more processors in a multi-processing arrangement may also be employed to execute the instructions contained in main memory **1205**. In alternative embodiments, hard-wired circuitry may be used in place of or in combination with software instructions to implement the embodiment of the invention. In another example, reconfigurable hardware such as Field Programmable Gate Arrays (FPGAs) can be used, in which the functionality and connection topology of its logic gates are customizable at run-time, typically by programming memory look up tables. Thus, embodiments of the invention are not limited to any specific combination of hardware circuitry and software.

The computing system **1200** also includes at least one communication interface **1215** coupled to bus **1201**. The communication interface **1215** provides a two-way data communication coupling to a network link (not shown). The communication interface **1215** sends and receives electrical, electromagnetic, or optical signals that carry digital data streams representing various types of information. Further, the communication interface **1215** can include peripheral interface devices, such as a Universal Serial Bus (USB) interface, a PCMCIA (Personal Computer Memory Card International Association) interface, etc.

The processor **1203** may execute the transmitted code while being received and/or store the code in the storage device **1209**, or other non-volatile storage for later execution. In this manner, the computing system **1200** may obtain application code in the form of a carrier wave.

The term "computer-readable medium" as used herein refers to any medium that participates in providing instructions to the processor **1203** for execution. Such a medium may take many forms, including but not limited to non-volatile media, volatile media, and transmission media. Non-volatile media include, for example, optical or magnetic disks, such as the storage device **1209**. Volatile media include dynamic memory, such as main memory **1205**. Transmission media include coaxial cables, copper wire and fiber optics, including the wires that comprise the bus **1201**. Transmission media can also take the form of acoustic, optical, or electromagnetic waves, such as those generated during radio frequency (RF) and infrared (IR) data communications. Common forms of computer-readable media include, for example, a floppy disk, a flexible disk, hard disk, magnetic tape, any other magnetic medium, a CD-ROM, CDRW, DVD, any other optical medium, punch cards, paper tape, optical mark sheets, any other physical medium with patterns of holes or other optically recognizable indicia, a RAM, a PROM, and EPROM, a FLASH-EPROM, any other memory chip or cartridge, a carrier wave, or any other medium from which a computer can read.

Various forms of computer-readable media may be involved in providing instructions to a processor for execution. For example, the instructions for carrying out at least part of the invention may initially be borne on a magnetic disk of a remote computer. In such a scenario, the remote computer loads the instructions into main memory and sends the instructions over a telephone line using a modem. A modem of a local system receives the data on the telephone line and uses an infrared transmitter to convert the data to an infrared signal and transmit the infrared signal to a portable computing device, such as a personal digital assistant (PDA) or a laptop. An infrared detector on the portable computing device receives the information and instructions borne by the infrared signal and places the data on a bus. The bus conveys the data to main memory, from which a processor retrieves and executes the instructions. The instructions received by main memory can optionally be stored on storage device either before or after execution by processor.

FIGS. **13**A-**13**D are diagrams of communication systems having exemplary long-term evolution (LTE) architectures, in which the system of FIG. **1** can operate, according to various exemplary embodiments of the invention. By way of example (shown in FIG. **13**A), a base station (e.g., destination node **103**) and a user equipment (UE) (e.g., source node **101**) can communicate in system **1300** using any access scheme, such as Time Division Multiple Access (TDMA), Code Division Multiple Access (CDMA), Wideband Code Division Multiple Access (WCDMA), Orthogonal Frequency Division Multiple Access (OFDMA) or Single Carrier Frequency Division Multiple Access (FDMA) (SC-FDMA) or a combination of thereof. In an exemplary embodiment, both uplink and downlink can utilize WCDMA. In another exemplary embodiment, uplink utilizes SC-FDMA, while downlink utilizes OFDMA.

The communication system **1300** is compliant with 3GPP LTE, entitled "Long Term Evolution of the 3GPP Radio Technology" (which is incorporated herein by reference in its entirety). As shown in FIG. **13**A, one or more user equipment (UEs) **101** communicate with a network equipment, such as a base station **103**, which is part of an access network (e.g., WiMAX (Worldwide Interoperability for Microwave Access), 3GPP LTE (or E-UTRAN or 3.9G), etc.). Under the 3GPP LTE architecture, base station **103** is denoted as an enhanced Node B (eNB). The UE **101** can be any type of mobile stations, such as handsets, terminals, stations, units, devices, or any type of interface to the user (such as "wearable" circuitry, etc.).

The MME (Mobile Management Entity)/Serving Gateways **1301** are connected to the eNBs **103** in a full or partial mesh configuration using tunneling over a packet transport network (e.g., Internet Protocol (IP) network) **1303**. Exemplary functions of the MME/Serving GW **1301** include distribution of paging messages to the eNBs **103**, termination of U-plane packets for paging reasons, and switching of U-plane for support of UE mobility. Since the GWs **1301** serve as a gateway to external networks, e.g., the Internet or private networks **1303**, the GWs **1301** include an Access, Authorization and Accounting system (AAA) **1305** to securely determine the identity and privileges of a user and to track each user's activities. Namely, the MME Serving Gateway **1301** is the key control-node for the LTE access-network and is responsible for idle mode UE tracking and

paging procedure including retransmissions. Also, the MME **1301** is involved in the bearer activation/deactivation process and is responsible for selecting the SGW (Serving Gateway) for a UE at the initial attach and at time of intra-LTE handover involving Core Network (CN) node relocation.

A more detailed description of the LTE interface is provided in 3GPP TR 25.813, entitled "E-UTRA and E-UTRAN: Radio Interface Protocol Aspects," which is incorporated herein by reference in its entirety.

In FIG. **13**B, a communication system **1302** supports GERAN (GSM/EDGE radio access) **1304**, and UTRAN **1306** based access networks, E-UTRAN **1312** and non-3GPP (not shown) based access networks, and is more fully described in TR 23.882, which is incorporated herein by reference in its entirety. A key feature of this system is the separation of the network entity that performs control-plane functionality (MME **1308**) from the network entity that performs bearer-plane functionality (Serving Gateway **1310**) with a well defined open interface between them S11. Since E-UTRAN **1312** provides higher bandwidths to enable new services as well as to improve existing ones, separation of MME **1308** from Serving Gateway **1310** implies that Serving Gateway **1310** can be based on a platform optimized for signaling transactions. This scheme enables selection of more cost-effective platforms for, as well as independent scaling of, each of these two elements. Service providers can also select optimized topological locations of Serving Gateways **1310** within the network independent of the locations of MMEs **1308** in order to reduce optimized bandwidth latencies and avoid concentrated points of failure.

The basic architecture of the system **1302** contains following network elements. As seen in FIG. **13**B, the E-UTRAN (e.g., eNB) **1312** interfaces with UE **101** via LTE-Uu. The E-UTRAN **1312** supports LTE air interface and includes functions for radio resource control (RRC) functionality corresponding to the control plane MME **1308**. The E-UTRAN **1312** also performs a variety of functions including radio resource management, admission control, scheduling, enforcement of negotiated uplink (UL) QoS (Quality of Service), cell information broadcast, ciphering/deciphering of user, compression/decompression of downlink and uplink user plane packet headers and Packet Data Convergence Protocol (PDCP).

The MME **1308**, as a key control node, is responsible for managing mobility UE identifies and security parameters and paging procedure including retransmissions. The MME **1308** is involved in the bearer activation/deactivation process and is also responsible for choosing Serving Gateway **1310** for the UE **101**. MME **1308** functions include Non Access Stratum (NAS) signaling and related security. MME **1308** checks the authorization of the UE **101** to camp on the service provider's Public Land Mobile Network (PLMN) and enforces UE **101** roaming restrictions. The MME **1308** also provides the control plane function for mobility between LTE and 2G/3G access networks with the S3 interface terminating at the MME **1308** from the SGSN (Serving GPRS Support Node) **1314**.

The SGSN **1314** is responsible for the delivery of data packets from and to the mobile stations within its geographical service area. Its tasks include packet routing and transfer, mobility management, logical link management, and authentication and charging functions. The S6a interface enables transfer of subscription and authentication data for authenticating/authorizing user access to the evolved system (AAA interface) between MME **1308** and HSS (Home Subscriber Server) **1316**. The S10 interface between MMEs **1308** provides MME relocation and MME **1308** to MME **1308** information transfer. The Serving Gateway **1310** is the node that terminates the interface towards the E-UTRAN **1312** via S1-U.

The S1-U interface provides a per bearer user plane tunneling between the E-UTRAN **1312** and Serving Gateway **1310**. It contains support for path switching during handover between eNBs **103**. The S4 interface provides the user plane with related control and mobility support between SGSN **1314** and the 3GPP Anchor function of Serving Gateway **1310**.

The S12 is an interface between UTRAN **1306** and Serving Gateway **1310**. Packet Data Network (PDN) Gateway **1318** provides connectivity to the UE **101** to external packet data networks by being the point of exit and entry of traffic for the UE **101**. The PDN Gateway **1318** performs policy enforcement, packet filtering for each user, charging support, lawful interception and packet screening. Another role of the PDN Gateway **1318** is to act as the anchor for mobility between 3GPP and non-3GPP technologies such as WiMax and 3GPP2 (CDMA 1X and EvDO (Evolution Data Only)).

The S7 interface provides transfer of QoS policy and charging rules from PCRF (Policy and Charging Role Function) **1320** to Policy and Charging Enforcement Function (PCEF) in the PDN Gateway **1318**. The SGi interface is the interface between the PDN Gateway and the operator's IP services including packet data network **1322**. Packet data network **1322** may be an operator external public or private packet data network or an intra operator packet data network, e.g., for provision of IMS (IP Multimedia Subsystem) services. Rx+ is the interface between the PCRF and the packet data network **1322**.

As seen in FIG. **13**C, the eNB **103** utilizes an E-UTRA (Evolved Universal Terrestrial Radio Access) (user plane, e.g., RLC (Radio Link Control) **1315**, MAC (Media Access Control) **1317**, and PHY (Physical) **1319**, as well as a control plane (e.g., RRC **1321**)). The eNB **103** also includes the following functions: Inter Cell RRM (Radio Resource Management) **1323**, Connection Mobility Control **1325**, RB (Radio Bearer) Control **1327**, Radio Admission Control **1329**, eNB Measurement Configuration and Provision **1331**, and Dynamic Resource Allocation (Scheduler) **1333**.

The eNB **103** communicates with the aGW **1301** (Access Gateway) via an S1 interface. The aGW **1301** includes a User Plane **1301***a* and a Control plane **1301***b*. The control plane **1301***b* provides the following components: SAE (System Architecture Evolution) Bearer Control **1335** and MM (Mobile Management) Entity **1337**. The user plane **1301***b* includes a PDCP (Packet Data Convergence Protocol) **1339** and a user plane functions **1341**. It is noted that the functionality of the aGW **1301** can also be provided by a combination of a serving gateway (SGW) and a packet data network (PDN) GW. The aGW **1301** can also interface with a packet network, such as the Internet **1343**.

In an alternative embodiment, as shown in FIG. **13**D, the PDCP (Packet Data Convergence Protocol) functionality can reside in the eNB **103** rather than the GW **1301**. Other than this PDCP capability, the eNB functions of FIG. **13**C are also provided in this architecture.

In the system of FIG. **13**D, a functional split between E-UTRAN and EPC (Evolved Packet Core) is provided. In this example, radio protocol architecture of E-UTRAN is provided for the user plane and the control plane. A more detailed description of the architecture is provided in 3GPP TS 36.300.

The eNB **103** interfaces via the S1 to the Serving Gateway **1345**, which includes a Mobility Anchoring function **1347**. According to this architecture, the MME (Mobility Management Entity) **1349** provides SAE (System Architecture Evolution) Bearer Control **1351**, Idle State Mobility Handling **1353**, and NAS (Non-Access Stratum) Security **1355**.

FIG. **14** is a diagram of exemplary components of an LTE terminal capable of operating in the systems of FIGS. **13**A-**13**D, according to an embodiment of the invention. An LTE terminal **1400** is configured to operate in a Multiple Input Multiple Output (MIMO) system. Consequently, an antenna system **1401** provides for multiple antennas to receive and transmit signals. The antenna system **1401** is coupled to radio circuitry **1403**, which includes multiple transmitters **1405** and receivers **1407**. The radio circuitry encompasses all of the Radio Frequency (RF) circuitry as well as base-band processing circuitry. As shown, layer-1 (L1) and layer-2 (L2) processing are provided by units **1409** and **1411**, respectively. Optionally, layer-3 functions can be provided (not shown). Module **1413** executes all MAC layer functions. A timing and calibration module **1415** maintains proper timing by interfacing, for example, an external timing reference (not shown). Additionally, a processor **1417** is included. Under this scenario, the LTE terminal **1400** communicates with a computing device **1419**, which can be a personal computer, work station, a PDA, web appliance, cellular phone, etc.

While the invention has been described in connection with a number of embodiments and implementations, the invention is not so limited but covers various obvious modifications and equivalent arrangements, which fall within the purview of the appended claims. Although features of the invention are expressed in certain combinations among the claims, it is contemplated that these features can be arranged in any combination and order.

What is claimed is:

1. A method comprising:
- receiving a signal over a communication link;
- demodulating the signal;
- computing a cyclic redundancy check for the received signal;
- estimating soft symbols based on probability information corresponding to the demodulated signal;
- remodulating the demodulated signal based on the soft symbols; and
- outputting a relay signal based on the remodulated signal,
- wherein, if the cyclic redundancy check is incorrect, the estimation of the soft symbols is performed,
- wherein the received signal includes systematic bits and parity bits,
- wherein the parity bits are forwarded in advance of the systematic bits if the cyclic redundancy check is correct,
- wherein the systematic bits are forwarded in advance of the parity bits if the cyclic redundancy check is incorrect.

2. A method according to claim **1**, further comprising:
- decoding the demodulated signal, wherein the soft symbols are estimated using probability information corresponding to the decoded signal; and
- forwarding the relay signal irrespective of whether the decoding is correct.

3. A method according to claim **1**, wherein the signal is originated from a source node, the relay signal being transmitted to a destination node that is configured to combine the relay signal with the signal from the source node.

4. An apparatus comprising:
- a demodulator configured to demodulate a signal received over a communication link;
- logic configured to compute a cyclic redundancy check for the received signal;
- a soft symbol estimator configured to estimate soft symbols based on probability information corresponding to the demodulated signal; and
- a re-modulator configured to remodulate the demodulated signal based on the soft symbols as a relay signal,
- wherein, if the cyclic redundancy check is incorrect, the estimation of the soft symbols is performed,
- wherein the received signal includes systematic bits and parity bits,
- wherein the parity bits are forwarded in advance of the systematic bits if the cyclic redundancy check is correct,
- wherein the systematic bits are forwarded in advance of the parity bits if the cyclic redundancy check is incorrect.

5. An apparatus according to claim **4**, further comprising:
- a decoder configured to decode the demodulated signal, wherein the soft symbols are estimated using probability information corresponding to the decoded signal; and
- a transceiver configured to forward the relay signal irrespective of whether the decoding is correct.

6. An apparatus according to claim **4**, wherein the signal is originated from a source node, the relay signal being transmitted to a destination node that is configured to combine the relay signal with the signal from the source node.

7. An apparatus according to claim **6**, wherein the signals are combined by the destination node either at a symbol level if identical modulation schemes are applied to the signals, or at a bit level if different modulation schemes are applied to the signals.

8. An apparatus according to claim **4**, wherein the signal is originated from a source node, and the relay signal is transmitted to a destination node that does not receive the signal directly from the source node.

9. An apparatus according to claim **4**, further comprising:
- an equalizer configured to perform channel equalization on the received signal using channel coefficients of the communication link.

10. An apparatus according to claim **4**, further comprising:
- logic configured to compare the probability information with a threshold before performing soft symbol estimation, wherein values, associated with the probability information, that are larger than the threshold are set as the value of the threshold to reduce peak-to-mean ratio value.

11. An apparatus according to claim **4**, wherein the probability information includes a posteriori probability from at least one of a demodulator, a decoder, or a re-encoder.

12. An apparatus according to claim **4**, wherein the communication link is established over network that is compliant with a long term evolution (LTE) architecture.

13. A system comprising:
- a relay node configured to receive a signal over a communication link, to compute a cyclic redundancy check for the received signal, to demodulate the signal, and to estimate soft symbols based on probability information corresponding to the demodulated signal,

wherein the relay node is further configured to remodulate the demodulated signal based on the soft symbols as a relay signal,

wherein, if the cyclic redundancy check is incorrect, the estimation of the soft symbols is performed,

wherein the received signal includes systematic bits and parity bits,

wherein the parity bits are forwarded in advance of the systematic bits if the cyclic redundancy check is correct,

wherein the systematic bits are forwarded in advance of the parity bits if the cyclic redundancy check is incorrect.

14. A system according to claim **13**, wherein the relay node is further configured to decode the demodulated signal, wherein the soft symbols are estimated using probability information corresponding to the decoded signal, the relay node being further configured to forward the relay signal irrespective of whether the decoding is correct.

15. A system according to claim **13**, wherein the signal is originated from a source node, the relay signal being transmitted to a destination node that is configured to combine the relay signal with the signal from the source node.

16. A system according to claim **13**, wherein the signals are combined by the destination node either at a symbol level if identical modulation schemes are applied to the signals, or at a bit level if different modulation schemes are applied to the signals.

17. A system according to claim **13**, wherein the signal is originated from a source node, and the relay signal is transmitted to a destination node that does not receive the signal directly from the source node.

18. A system according to claim **13**, wherein the relay node is further configured to obtain channel coefficients of the communication link, and to perform channel equalization on the received signal using the channel coefficients.

* * * * *